Il classico è di moda

Riscoprire l'autenticità ed il valore del saper vivere con gusto.

Veronica è caratterizzata da un design dalle linee sobrie e pulite.
L'ineccepibile qualità dei materiali utilizzati e la massima cura nei dettagli costruttivi si combinano per garantire un'offerta senza tempo.
Versatilità e funzionalità sono gli aspetti distintivi di questo modello di cucina, studiato per accogliere e razionalizzare l'ambiente cucina.
Veronica è una cucina che invita a riscoprire i valori tradizionali e sempre attuali del ricevere, i valori del vivere con gusto.

Classic style is in fashion.

Rediscovering tasteful living's authenticity and value.

Veronica is characterised by a design with understated and clean lines. The flawless quality of the materials used and the utmost care in the construction details combine to guarantee a timeless offer.
Versatility and functionality are the very distinguishing features of such model, designed to welcome and rationalise the setting.
Veronica is a kitchen that invites to rediscover the traditional and still valid value of entertaining, the value of tasteful living.

VERONICA

cod. **404**

SP. 24 MM

VERONICA

CARATTERISTICHE TECNICHE

ANTE	intelaiata sp.24 mm in massello di frassino con bugna in mdf (conforme US EPA TSCA Title VI) impiallacciata in frassino fiamma verticale nei colori: bianco decapè spazzolato a poro aperto (opz.583), argilla decapè grigio spazzolato a poro aperto (opz.587) intelaiata sp.24 mm in massello di indica con bugna in massello di indica fiamma verticale nei colori: laccato bianco assoluto decapato grigio spazzolato a poro aperto (opz.588), tinto noce spazzolato (opz.589) intelaiata sp.24 mm in massello di frassino, bugna in mdf (conforme US EPA TSCA Title VI) impiallacciata frassino laccato a poro aperto nei colori: bianco artico (opz.590), cammello (opz.592), grigio fumo (opz.594), sahara (opz.591), grigio luce (opz.593), grigio reale (opz.595), piombo (opz.598)
ANTE CON GRATA	disponibili nelle misure 71,7x44,6 - 71,7x59,6 - 35,7x44,6 - 35,7x59,6 - 35,7x89,6 nei colori: bianco decapè spazzolato a poro aperto (opz.583G), argilla decapè grigio spazzolato a poro aperto (opz.587G), laccato bianco assoluto decapato grigio spazzolato a poro aperto (opz.588G), tinto noce spazzolato (opz.589G),
FRONTALI CASSETTI	in massello di frassino nei colori: bianco decapè spazzolato a poro aperto (opz.583), argilla decapè grigio spazzolato a poro aperto (opz.587) in massello di indica nei colori: laccato bianco assoluto decapato grigio spazzolato a poro aperto (opz.588), tinto noce spazzolato (opz.589) in massello di frassino nei colori: bianco artico (opz.590), cammello (opz.592), grigio fumo (opz.594), sahara (opz.591), grigio luce (opz.593), grigio reale (opz.595), piombo (opz.598)
ANTE VETRO di serie	VETRO MOLATO E SERIGRAFATO SP.4 MM telaio sp.24 mm in massello di frassino nelle finiture: bianco decapè spazzolato a poro aperto (opz.583S), argilla decapè grigio spazzolato a poro aperto (opz.587S) telaio sp.24 mm in massello di indica nelle finiture: laccato bianco assoluto decapato grigio spazzolato a poro aperto (opz.588S), tinto noce spazzolato (opz.589S) VETRO MOLATO SATINATO SP.4 MM telaio sp.24 mm in massello di frassino nelle finiture: bianco artico (opz.590), cammello (opz.592), grigio fumo (opz.594), sahara (opz.591), grigio luce (opz.593), grigio reale (opz.595), piombo (opz.598)
ANTE VETRO a richiesta	VETRO ANTICO “F” SP.4 MM TELAIO CON INGLESINA telaio sp.24 mm in massello di frassino nelle finiture: bianco decapè spazzolato a poro aperto (opz.583I), argilla decapè grigio spazzolato a poro aperto (opz.587I) telaio sp.24 mm in massello di indica nelle finiture: laccato bianco assoluto decapato grigio spazzolato a poro aperto (opz.588I), tinto noce spazzolato (opz.589I) VETRO ANTICO “F” SP.4 MM TELAIO CON INGLESINA E FORMELLA IN CERAMICA DIPINTA A MANO DECORO CASTAGNE telaio sp.24 mm in massello di frassino nelle finiture: bianco decapè spazzolato a poro aperto (opz.583IC), argilla decapè grigio spazzolato a poro aperto (opz.587IC) telaio sp.24 mm in massello di indica nelle finiture: laccato bianco assoluto decapato grigio spazzolato a poro aperto (opz.588IC), tinto noce spazzolato (opz.589IC) VETRO ANTICO “F” SP.4 MM TELAIO CON INGLESINA E FORMELLA IN CERAMICA DIPINTA A MANO DECORO FLOREALE telaio sp.24 mm in massello di frassino nelle finiture: bianco decapè spazzolato a poro aperto (opz.583IF), argilla decapè grigio spazzolato a poro aperto (opz.587IF), telaio sp.24 mm in massello di indica nelle finiture: laccato bianco assoluto decapato grigio spazzolato a poro aperto (opz.588IF), tinto noce spazzolato (opz.589IF) VETRO MOLATO BRONZO SP.4 MM telaio sp.24 mm in massello di frassino nelle finiture: bianco artico (opz.590B), cammello (opz.592B), grigio fumo (opz.594B), sahara (opz.591B), grigio luce (opz.593B), grigio reale (opz.595B), piombo (opz.598B) VETRO MOLATO FUMÈ SP.4 MM telaio sp.24 mm in massello di frassino nelle finiture: bianco artico (opz.590F), cammello (opz.592F), grigio fumo (opz.594F), sahara (opz.591F), grigio luce (opz.593F), grigio reale (opz.595F), piombo (opz.598F)

cod. **404**

SP. 24 MM

VERONICA

CARATTERISTICHE TECNICHE

MANIGLIE

di serie:
255P finitura piombo spazzolato passo mm 160
per anta L 15 pomo finitura piombo spazzolato 255PP

255N finitura nichel satinato passo mm 160
per anta L 15 pomo finitura nichel satinato 255NP

255R finitura rame antico passo mm 160
per anta L 15 pomo finitura rame antico 255RP

255T finitura ottone antico passo mm 160
per anta L 15 pomo finitura ottone antico 255TP

a richiesta:
227 finitura ottone brunito passo mm 128
per anta L 15 pomo finitura ottone vecchio 228P

228 finitura ottone vecchio inserto avorio passo mm 128
per anta L 15 pomo finitura ottone vecchio 228P

224 finitura argento antico passo mm 128
per anta L 15 pomo finitura argento antico 224P

225 finitura argento antico passo mm 128
per anta L 15 pomo finitura argento antico 224P

263 finitura nichel opaco con swarovski passo mm 128
per anta L 15 pomo finitura nichel opaco con swarovski 263P

266 finitura argento orientale passo mm 128
per anta L 15 pomo argento orientale 266/1 passo 64 mm

264 finitura argento antico passo mm 128
per anta L 15 pomo finitura argento antico 264P

K91 finitura canna di fucile spazzolato passo mm 160
per anta L 15 pomo 240P finitura canna di fucile spazzolato

K91G finitura oro passo mm 160
per anta L 15 pomo K91GP finitura oro

256P finitura peltro spazzolato passo mm 160
per anta L 15 pomo finitura peltro spazzolato 256PP

257N finitura nichel satinato passo mm 160
per anta L 15 pomo finitura nichel satinato 257NP

257S finitura silver dark passo mm 160
per anta L 15 pomo finitura silver dark 257SP

620 pomo in ceramica colore avorio

STRUTTURE

ANTE: bianco decapè spazzolato a poro aperto, sahara
nobilitato lino effetto tela (opz.8920) schiena e ripiano conchiglia (opz.8910)

ANTA: tinto noce spazzolato
nobilitato teff effetto tela (opz.9496) schiena e ripiano visone (opz.948M)

ANTA: argilla decapè grigio spazzolato a poro aperto, cammello
nobilitato juta effetto tela (opz.9490) schiena e ripiano visone (opz.948M)

ANTA: laccato bianco assoluto decapato grigio spazzolato, bianco artico, grigio fumo, grigio luce, grigio reale, piombo
nobilitato grigio effetto tela (opz.9695) schiena e ripiano argilla (opz.9690)

a richiesta: nobilitato bianco (opz.001) schiena e ripiano bianco (opz.001)
nobilitato visone (opz.948M) schiena e ripiano visone (opz.948M)
nobilitato fango (opz.8860) schiena e ripiano fango (opz.8860)
nobilitato conchiglia (opz.8910) schiena e ripiano conchiglia (opz.8910)
nobilitato argilla (opz.9690) schiena e ripiano argilla (opz.9690)
nobilitato lavagna (opz.9620) schiena e ripiano lavagna (opz.9620)
nobilitato castagno naturale (opz.581) schiena e ripiano bianco (opz.001)
nobilitato castagno tinto noce (opz.582) schiena e ripiano bianco (opz.001)

LUBE ECOLOGIC
IL GRUPPO LUBE UTILIZZA PER I COMPONENTI COSTITUENTI LE STRUTTURE DELLE CUCINE SOLO MATERIALE ECOLOGICO F★★★★ SECONDO LA NORMA JIS, CERTIFICATO DAL MINISTERO GIAPPONESE, IL PIÙ SEVERO IN MERITO ALLE NORMATIVE DI SALVAGUARDIA AMBIENTALE.

MENSOLE

vedi pag.33

ZOCCOLI

vedi pag.34

CUCINE LUBE

code **404**

TH. 24 MM

VERONICA

TECHNICAL FEATURES

DOORS	24 mm-thick frame made of solid ash with MDF raised panel (conforming to US EPA TSCA Title VI) with ash veneer with vertical grain, in the following colours: open-pore brushed pickled white (opt. 583), open-pore brushed pickled clay grey (opt. 587) solid Indica frame Th. 24 mm with solid wood raised panel with vertical grain in the following finishes: absolute white lacquer open-pore brushed pickled grey (opt. 588), brushed walnut stained (opt. 589) 24 mm-thick frame made of solid ash with MDF raised panel (conforming to US EPA TSCA Title VI) with ash veneer with open-pore lacquer finish, in the following colours: arctic white (opt. 590), camel (opt. 592), smoke grey (opt. 594), sahara (opt. 591), light grey (opt. 593), royal grey (opt. 595), lead (opt. 598)
DOORS WITH GRATING	available in sizes 71.7 x 44.6 - 71.7 x 59.6 - 35.7 x 44.6 - 35.7 x 59.6 - 35.7 x 89.6 in the following colours: open-pore brushed pickled white (opt. 583G), open-pore brushed pickled clay grey (opt. 587G), absolute white lacquer open-pore brushed pickled grey (opt. 588G), brushed walnut-stained (opt. 589G),
DRAWER FRONT PANELS	in solid ash in the following colours: open-pore brushed pickled white (opt. 583), open-pore brushed pickled clay grey (opt. 587) in solid Indica in the following colours: absolute white lacquer open-pore brushed pickled grey (opt. 588), brushed walnut stained (opt. 589) in solid ash in the following colours: arctic white (opt. 590), camel (opt. 592), smoke grey (opt. 594), sahara (opt. 591), light grey (opt. 593), royal grey (opt. 595), lead (opt. 598)
GLASS DOORS as standard	4 MM THICK SCREEN-PRINTED AND GROUND GLASS 24 mm Th. solid ash frame in the following finish: open-pore brushed pickled white (opt. 583S), open-pore brushed pickled clay grey (opt. 587S) 24 mm Th. solid Indica frame in the following finishes: absolute white lacquer open-pore brushed pickled grey (opt. 588S), brushed walnut-stained (opt. 589S) 4 MM THICK GROUND AND FROSTED GLASS 24 mm Th. solid ash frame in the following finishes: arctic white (opt. 590), camel (opt. 592), smoke grey (opt. 594), sahara (opt. 591), light grey (opt. 593), royal grey (opt. 595), lead (opt. 598)
GLASS DOORS on request	4MM THICK ANTIQUE GLASS “F” FRAME WITH GLASS PANELS 24 mm Th. solid ash frame in the following finish: open-pore brushed pickled white (opt. 583I), open-pore brushed pickled clay grey (opt. 587I) 24 mm Th. solid Indica frame in the following finishes: absolute white lacquer open-pore brushed pickled grey (opt. 588I), brushed walnut-stained (opt. 589I) 4MM THICK ANTIQUE GLASS “F” FRAME WITH GLASS PANELS AND HAND-PAINTED CERAMIC TILE WITH CHESTNUT DECORATION 24 mm Th. solid ash frame in the following finish: open-pore brushed pickled white (opt. 583IC), open-pore brushed pickled clay grey (opt. 587IC) 24 mm Th. solid Indica frame in the following finishes: absolute white lacquer open-pore brushed pickled grey (opt. 588IC), brushed walnut-stained (opt. 589IC) 4MM THICK ANTIQUE GLASS “F” FRAME WITH GLASS PANELS AND HAND-PAINTED CERAMIC TILE WITH FLORAL DECORATION 24 mm Th. solid ash frame in the following finish: open-pore brushed pickled white (opt. 583IF), open-pore brushed pickled clay grey (opt. 587IF), 24 mm Th. solid Indica frame in the following finishes: absolute white lacquer open-pore brushed pickled grey (opt. 588IF), brushed walnut-stained (opt. 589IF) 4 MM THICK GROUND AND BRONZED GLASS 24 mm Th. solid ash frame in the following finishes: arctic white (opt. 590B), camel (opt. 592B), smoke grey (opt. 594B), sahara (opt. 591B), light grey (opt. 593B), royal grey (opt. 595B), lead (opt. 598B) 4MM THICK GROUND AND SMOKED GLASS 24 mm Th. solid ash frame in the following finishes: arctic white (opt. 590F), camel (opt. 592F), smoke grey (opt. 594F), sahara (opt. 591F), light grey (opt. 593F), royal grey (opt. 595F), lead (opt. 598F)

code **404**

TH. 24 MM

VERONICA

TECHNICAL FEATURES

HANDLES

standard:
255P brushed lead finish, centre-to-centre distance 160 mm
for door W 15 brushed lead finish knob 255PP

255N satin nickel finish, centre-to-centre distance 160 mm
for door W 15 satin nickel finish knob 255NP

255R antique copper finish, centre-to-centre distance 160 mm
for door W 15 antique copper finish knob 255RP

255T antique brass finish, centre-to-centre distance 160 mm
for door W 15 antique brass finish knob 255TP

on request:
227 burnished brass finish, centre-to-centre distance 128 mm
for door W 15 knob with old brass finish 228P

228 old brass finish with ivory insert, centre-to-centre distance 128 mm
for door W 15 knob with old brass finish 228P

224 antique silver finish, centre-to-centre distance 128 mm
for door W 15 antique silver finish knob 224P

225 antique silver finish, centre-to-centre distance 128 mm
for door W 15 antique silver finish knob 224P

263 matt nickel finish with swarovski crystals, 128 mm centre-to-centre distance
for door W 15 matt nickel knob with swarovski crystals 263P

266 oriental silver finish, centre-to-centre distance 128 mm
for door W 15 oriental silver knob 266/1, centre-to-centre distance 64 mm

264 antique silver finish, centre-to-centre distance 128 mm
for door W 15 antique silver finish knob 264P

K91 brushed gunmetal finish, 160 mm centre-to-centre distance
for door W 15, knob 240P with brushed gunmetal finish

K91G gold finish, 160 mm centre-to-centre distance
for door W 15 gold finish K91GP knob

256P brushed pewter finish, centre-to-centre distance 160 mm
for door W 15 brushed pewter finish knob 256PP

257N satin nickel finish, centre-to-centre distance 160 mm
for door W 15 satin nickel finish knob 257NP

257S dark silver finish, centre-to-centre distance 160 mm
for door W 15 dark silver finish knob 257SP

620 ivory coloured ceramic knob hole

CARCASSES

DOORS: **open-pore brushed pickled white, sahara**
linen melamine-coated canvas effect (opt.8920) shell back panel and shelf (opt. 8910)

DOOR: **brushed chestnut stained**
teff melamine-coated canvas effect (opt.9496) mink back panel and shelf (opt. 948M)

DOOR: **open-pore brushed pickled clay grey, camel**
jute melamine-coated canvas effect (opt.9490) mink back panel and shelf (opt. 948M)

DOOR: **absolute white lacquer open-pore brushed pickled grey, arctic white, smoke grey, light grey, royal grey, lead**
grey melamine-coated canvas effect (opt.9695) clay back panel and shelf (opt. 9690)

on request: melamine-coated white (opt.001), white back panel and shelf (opt.001)
melamine-coated mink (opt.948M), mink back panel and shelf (opt.948M)
melamine-coated mud (opt.8860) mud back panel and shelf (opt.8860)
melamine-coated shell (opt.8910) shell back panel and shelf (opt.8910)
melamine-coated clay (opt.9690) clay back panel and shelf (opt.9690)
melamine-coated slate grey (opt.9620) slate grey back panel and shelf (opt.9620)
melamine-coated natural chestnut (opt.581), white back panel and shelf (opt.001)
melamine-coated walnut-stained (opt.582), white back panel and shelf (opt.001)

SHELVES see page 33

PLINTHS see page 34

cod. **404** SP. 24 MM

VERONICA

ante in frassino bianco decapè spazzolato a poro aperto
doors in open-pore brushed pickled white ash

colori in pronta consegna
available colours

anta (opz.583)
door (opt. 583)

anta con grata (opz.583G)
door with grating
(opt. 583G)

frontale cestone (opz.583)
deep drawer front panel
(opt. 583)

frontale cestone con grata
(opz.583G)
deep drawer front panel
with grating (opt. 583G)

frontale cassetto
(opz.583)
drawer front panel
(opt. 583)

SP. 24 MM

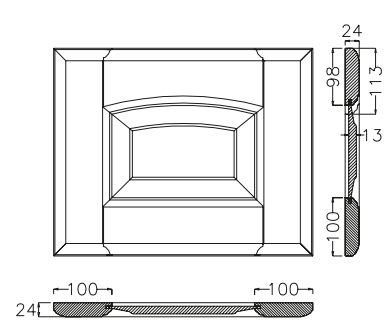

cod. **404** SP. 24 MM

VERONICA

ante vetro frassino bianco decapè spazzolato a poro aperto
glass doors in open-pore brushed pickled white ash

colori in pronta consegna
available colours

vetro molato e serigrafato (opz.583S)
screen-printed and ground glass (opt. 583S)

SP. 24 MM

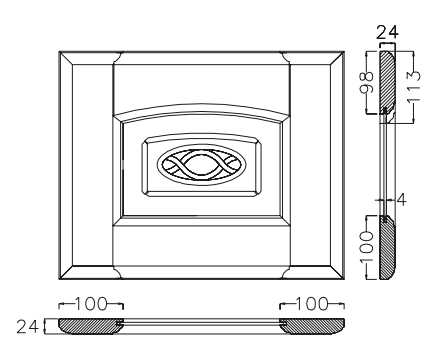

inglesina con vetro antico "F" (opz.583I)
glass panels with antique glass "F" (opt. 583I)

inglesina con formella in ceramica dipinta a mano decoro castagne, vetro antico "F" (opz.583IC)
glass panels with hand-painted ceramic tile with chestnut decoration, antique glass "F" (opt. 583IC)

inglesina con formella in ceramica dipinta a mano decoro floreale, vetro antico "F" (opz.583IF)
glass panels with hand-painted ceramic tile with floral decoration, antique glass "F" (opt. 583IF)

SP. 24 MM

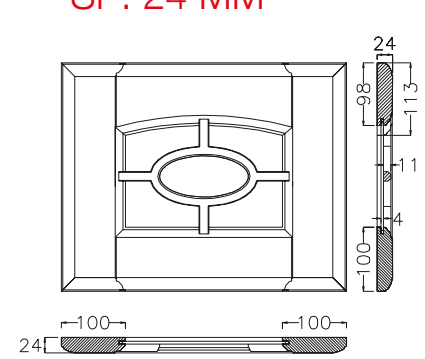

cod. **404** SP. 24 MM

VERONICA

ante in frassino argilla decapè grigio spazzolato a poro aperto
doors in open-pore brushed pickled clay grey ash

anta (opz.587)
door (opt. 587)

anta con grata (opz.587G)
door with grating
(opt. 587G)

colori in pronta consegna
available colours

frontale cestone (opz.587)
deep drawer front panel
(opt. 587)

frontale cestone con grata
(opz.587G)
deep drawer front panel
with grating (opt. 587G)

frontale cassetto
(opz.587)
drawer front panel
(opt. 587)

SP. 24 MM

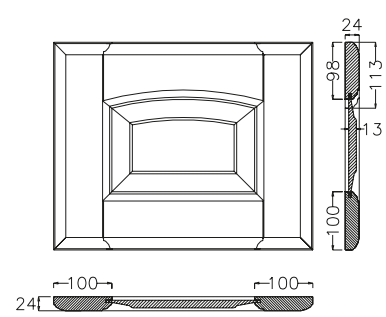

cod. **404** SP. 24 MM

VERONICA

ante vetro in frassino argilla decapè grigio spazzolato a poro aperto
glass doors in open-pore brushed pickled clay grey ash

colori in pronta consegna
available colours

SP. 24 MM

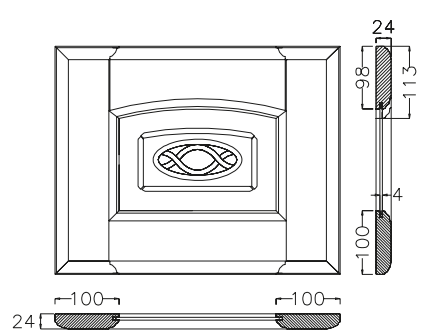

vetro molato e serigrafato (opz.587S)
screen-printed and ground glass (opt. 587S)

inglesina con vetro antico "F" (opz.587I)
glass panels with antique glass "F" (opt. 587I)

inglesina con formella in ceramica dipinta a mano decoro castagne, vetro antico "F" (opz.587IC)
glass panels with hand-painted ceramic tile with chestnut decoration, antique glass "F" (opt. 587IC)

inglesina con formella in ceramica dipinta a mano decoro floreale, vetro antico "F" (opz.587IF)
glass panels with hand-painted ceramic tile with floral decoration, antique glass "F" (opt. 587IF)

SP. 24 MM

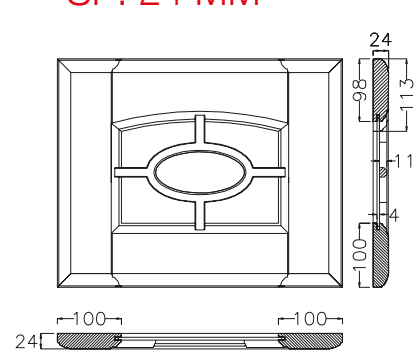

cod. **404** SP. 24 MM NEW

VERONICA

ante in massello di indica laccato bianco assoluto decapè grigio
doors solid walnut absolute white lacquer pickled grey indica

colori in pronta consegna
available colours

anta (opz.588)
door (opt. 588)

anta con grata (opz.588G)
door with grating
(opt. 588G)

frontale cestone (opz.588)
deep drawer front panel
(opt. 588)

frontale cestone con grata
(opz.588G)
deep drawer front panel
with grating (opt. 588G)

frontale cassetto
(opz.588)
drawer front panel
(opt. 588)

SP. 24 MM

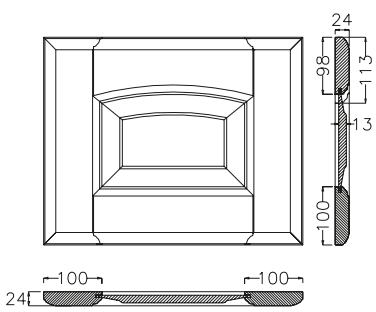

cod. **404** SP. 24 MM NEW

VERONICA

ante vetro in massello di indica laccato bianco assoluto decapè grigio
glass doors solid walnut absolute white lacquer pickled grey indica

colori in pronta consegna
available colours

vetro molato e serigrafato
(opz.588S)
screen-printed and
ground glass (opt. 588S)

SP. 24 MM

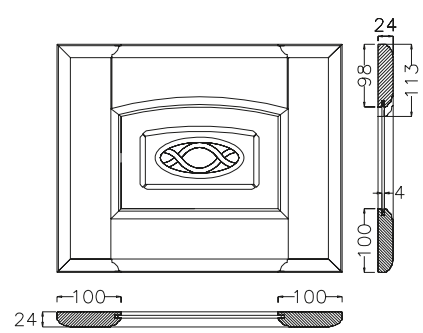

inglesina con vetro antico
“F” (opz.588I)
glass panels with antique
glass “F” (opt. 588I)

inglesina con formella
in ceramica dipinta a mano
decoro castagne,
vetro antico “F” (opz.588IC)
glass panels with
hand-painted ceramic tile with
chestnut decoration, antique
glass “F” (opt. 588IC)

inglesina con formella
in ceramica dipinta a mano
decoro floreale,
vetro antico “F” (opz.588IF)
glass panels with
hand-painted ceramic tile with
floral decoration, antique
glass “F” (opt. 588IF)

SP. 24 MM

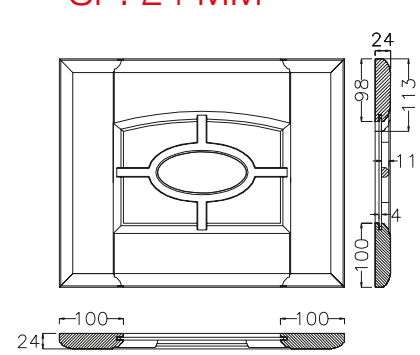

cod. **404** SP. 24 MM NEW

VERONICA

ante in massello di indica tinto noce spazzolato
doors in brushed solid walnut-stained indica

anta (opz.589)
door (opt. 589)

anta con grata (opz.589G)
door with grating
(opt. 589G)

colori in pronta consegna
available colours

frontale cestone (opz.589)
deep drawer front panel
(opt. 589)

frontale cestone con grata
(opz.589G)
deep drawer front panel
with grating (opt. 589G)

frontale cassetto
(opz.589)
drawer front panel
(opt. 589)

SP. 24 MM

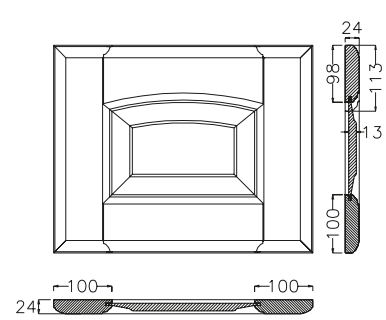

cod. **404** SP. 24 MM NEW

VERONICA

ante vetro in massello di indica tinto noce spazzolato
glass doors in brushed solid walnut-stained indica

colori in pronta consegna
available colours

vetro molato e serigrafato
(opz.589S)
screen-printed and
ground glass (opt. 589S)

SP. 24 MM

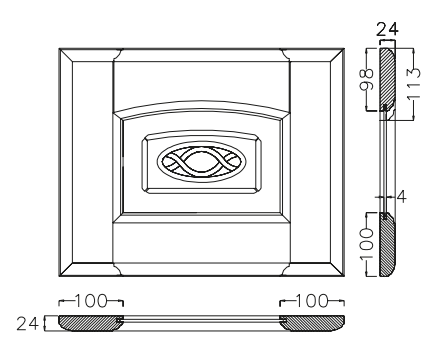

inglesina con vetro antico
“F” (opz.589I)
glass panels with antique
glass “F” (opt. 589I)

inglesina con formella
in ceramica dipinta a mano
decoro castagne,
vetro antico “F” (opz.589IC)
glass panels with
hand-painted ceramic tile with
chestnut decoration, antique
glass “F” (opt. 589IC)

inglesina con formella
in ceramica dipinta a mano
decoro floreale,
vetro antico “F” (opz.589IF)
glass panels with
hand-painted ceramic tile with
floral decoration, antique
glass “F” (opt. 589IF)

SP. 24 MM

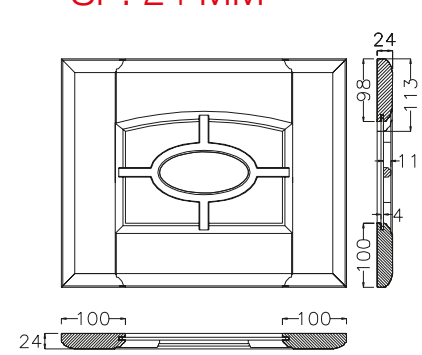

cod. **404** SP. 24 MM NEW

VERONICA

ante in frassino laccato a poro aperto bianco artico
doors ash with open-pore lacquer finish arctic white

anta bianco artico
(opz.590)
arctic white door
(opt. 590)

frontale cestone
bianco artico (opz.590)
deep drawer front
arctic white (opt. 590)

frontale cassetto
bianco artico (opz.590)
drawer front
arctic white (opt. 590)

SP. 24 MM

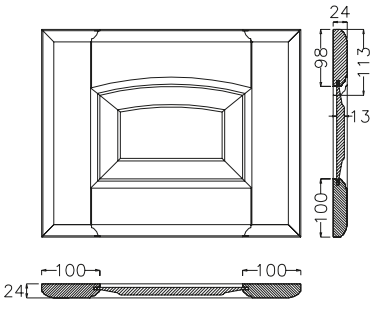

ante vetro in frassino laccato a poro aperto bianco artico
glass doors ash with open-pore lacquer finish arctic white

vetro molato satinato
(opz.590)
ground and frosted
(opt. 590)

vetro molato bronzo
(opz.590B)
ground and bronzed
(opt. 590B)

vetro molato fumè
(opz.590F)
ground and smoked
(opt. 590F)

SP. 24 MM

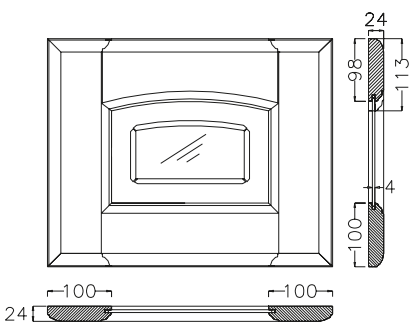

cod. **404** SP. 24 MM NEW

VERONICA

ante in frassino laccato a poro aperto cammello
doors ash with open-pore lacquer finish camel

anta cammello (opz.592)
camel door (opt. 592)

frontale cestone cammello (opz.592)
deep drawer front camel (opt. 592)

frontale cassetto cammello (opz.592)
drawer front camel (opt. 592)

SP. 24 MM

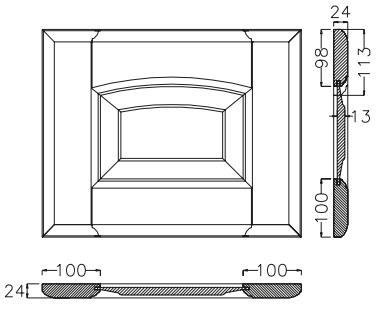

ante vetro in frassino laccato a poro aperto cammello
glass doors ash with open-pore lacquer finish camel

vetro molato satinato (opz.592)
ground and frosted (opt. 592)

vetro molato bronzo (opz.592B)
ground and bronzed (opt. 592B)

vetro molato fumè (opz.592F)
ground and smoked (opt. 592F)

SP. 24 MM

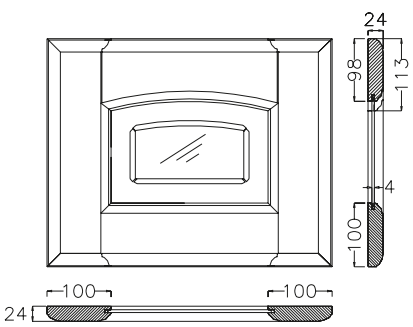

cod. **404** SP. 24 MM NEW

VERONICA

ante in frassino laccato a poro aperto grigio fumo
doors ash with open-pore lacquer finish smoke grey

anta grigio fumo
(opz.594)
smoke grey door
(opt. 594)

frontale cestone
grigio fumo (opz.594)
deep drawer front
smoke grey (opt. 594)

frontale cassetto
grigio fumo (opz.594)
drawer front
smoke grey (opt. 594)

SP. 24 MM

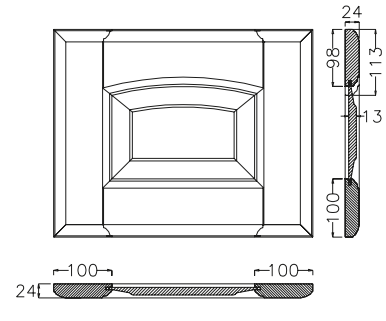

ante vetro in frassino laccato a poro aperto grigio fumo
glass doors ash with open-pore lacquer finish smoke grey

vetro molato satinato
(opz.594)
ground and frosted
(opt. 594)

vetro molato bronzo
(opz.594B)
ground and bronzed
(opt. 594B)

vetro molato fumè
(opz.594F)
ground and smoked
(opt. 594F)

SP. 24 MM

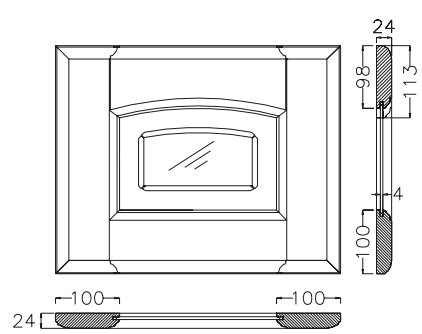

cod. **404** SP. 24 MM NEW

VERONICA

ante in frassino laccato a poro aperto sahara
doors ash with open-pore lacquer finish sahara

anta sahara (opz.591)
sahara door (opt. 591)

frontale cestone sahara (opz.591)
deep drawer front sahara (opt. 591)

frontale cassetto sahara (opz.591)
drawer front sahara (opt. 591)

SP. 24 MM

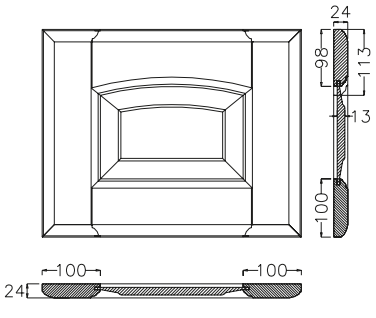

ante vetro in frassino laccato a poro aperto sahara
glass doors with open-pore lacquer finish sahara

vetro molato satinato (opz.591)
ground and frosted (opt. 591)

vetro molato bronzo (opz.591B)
ground and bronzed (opt. 591B)

vetro molato fumè (opz.591F)
ground and smoked (opt. 591F)

SP. 24 MM

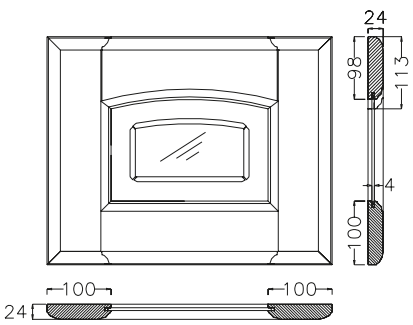

cod. **404** SP. 24 MM NEW

VERONICA

ante in frassino laccato a poro aperto grigio luce
doors ash with open-pore lacquer finish light grey

anta grigio luce (opz.593)
light grey door (opt. 593)

frontale cestone
grigio luce (opz.593)
deep drawer front
light grey (opt. 593)

frontale cassetto
grigio luce (opz.593)
drawer front
light grey (opt. 593)

SP. 24 MM

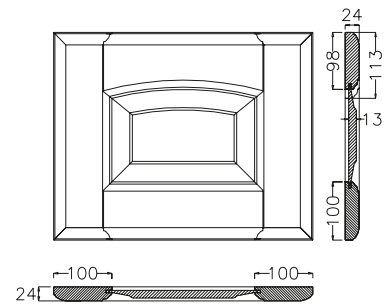

ante vetro in frassino laccato a poro aperto grigio luce
glass doors ash with open-pore lacquer finish light grey

vetro molato satinato
(opz.593)
ground and frosted
(opt. 593)

vetro molato bronzo
(opz.593B)
ground and bronzed
(opt. 593B)

vetro molato fumè
(opz.593F)
ground and smoked
(opt. 593F)

SP. 24 MM

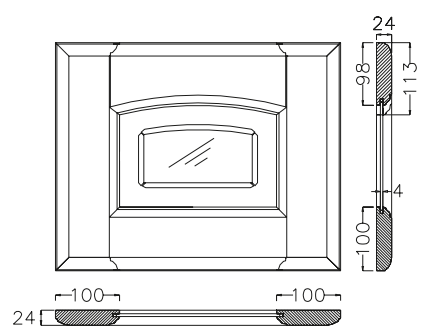

cod. **404** SP. 24 MM NEW

VERONICA

ante in frassino laccato a poro aperto piombo
doors ash with open-pore lacquer finish lead

anta piombo (opz.598)
lead door (opt. 598)

frontale cestone piombo (opz.598)
deep drawer front lead (opt. 598)

frontale cassetto piombo (opz.598)
drawer front lead (opt. 598)

SP. 24 MM

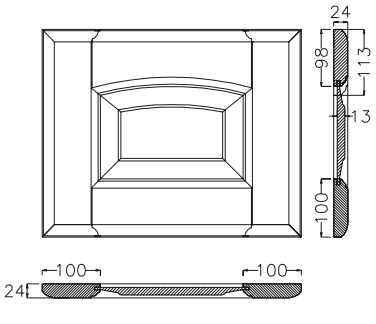

ante vetro in frassino laccato a poro aperto piombo
glass doors ash with open-pore lacquer finish lead

vetro molato satinato (opz.598)
ground and frosted (opt. 598)

vetro molato bronzo (opz.598B)
ground and bronzed (opt. 598B)

vetro molato fumè (opz.598F)
ground and smoked (opt. 598F)

SP. 24 MM

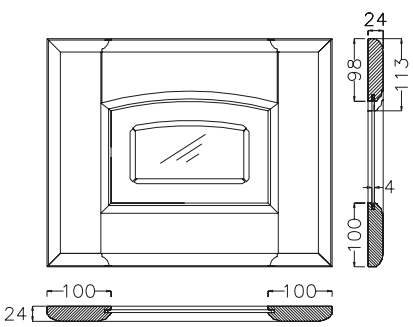

cod. **404** SP. 24 MM NEW

VERONICA

ante in frassino laccato a poro aperto grigio reale
doors ash with open-pore lacquer finish royal grey

anta grigio reale (opz.595)
royal grey door (opt. 595)

frontale cestone
grigio reale (opz.595)
deep drawer front
royal grey (opt. 595)

frontale cassetto
grigio reale (opz.595)
drawer front
royal grey (opt. 595)

SP. 24 MM

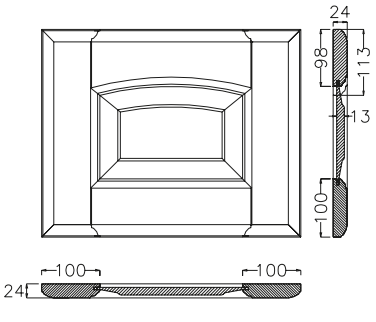

ante vetro in frassino laccato a poro aperto grigio reale
glass doors ash with open-pore lacquer finish royal grey

vetro molato satinato
(opz.595)
ground and frosted
(opt. 595)

vetro molato bronzo
(opz.595B)
ground and bronzed
(opt. 595B)

vetro molato fumè
(opz.595F)
ground and smoked
(opt. 595F)

SP. 24 MM

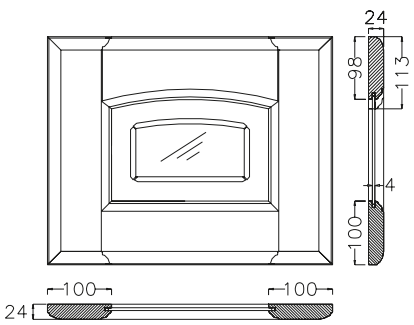

VETRO GLASS

CLICCA QUI PER LA GAMMA DEI VETRI TELAIO ALLUMINIO

CLICK HERE FOR THE RANGE OF ALUMINIUM FRAMED GLASS

cod. **404**

VERONICA

elementi da 15 con piastrelle 10x10

15 cm elements with 10x10 tiles

Serie: SASSI DEL PIAVE

Range: SASSI DEL PIAVE

botticino
(opz.120)
botticino

travertino noce
(opz.125)
walnut travertine

scabas
(opz.110)
scabas

giallo dorè
(opz.112)
golden yellow

travertino chiaro
(opz.127)
light travertine

cod. **404**

VERONICA

elementi con fresata

elements with groove

frassino bianco decapè (opz.583)
pickled white ash (opt. 583)

frassino argilla decapè grigio (opz.587)
pickled clay grey ash (opt. 587)

indica laccato bianco assoluto decapè grigio (opz.588)
lacquered white absolute pickled grey indica (opt. 588)

indica tinto noce (opz.589)
walnut-stained indica (opt. 589)

N.B.: disponibile nelle finiture bianco decapè (opz.583), argilla decapè grigio (opz.587), bianco assoluto decapato grigio (opz.588), tinto noce (opz.589)

Note: available for finishes pickled white (opt.583), pickeld clay grey (opt.587), absolute white pickled grey (opt.588), walnut stained (opt.589)

cod. **404**

VERONICA

elementi con fresata
elements with groove

frassino bianco artico (opz.590)
pickled arctic white (opt. 590)

frassino cammello (opz.592)
pickled camel (opt. 592)

frassino grigio fumo (opz.594)
pickled smoke grey (opt. 594)

frassino sahara (opz.591)
pickled sahara (opt. 591)

frassino grigio luce (opz.593)
pickled light grey (opt. 593)

frassino piombo (opz.598)
pickled lead (opt. 598)

frassino grigio reale (opz.595)
pickled royal grey (opt. 595)

cornici sagomate
shaped frame

grigio luce (opz.593)
light grey (opt. 593)

N.B.: disponibile nelle finiture bianco artico (opz.590), cammello (opz.592), grigio fumo (opz.594), sahara (opz.591), grigio reale (opz.595), piombo (opz.598)

Note: available or finishes arctic white (opt.590), camel (opt.592), smoke grey (opt.594), sahara (opt.591), royal grey (opt.595), lead (opt.598)

VERONICA

MANIGLIE HANDLES

DI SERIE STANDARD

Maniglia 255P finitura piombo spazzolato
passo 160 mm
Handle 255P brushed lead finish
160 mm centre-to-centre distance

Pomo 255PP finitura piombo spazzolato
utilizzato per elementi da 15
con maniglia 255P
Knob hole 255PP brushed lead finish
used for 15 cm elements with handle 255P

A RICHIESTA ON REQUEST

Maniglia 255N finitura nichel satinato
passo 160 mm
Handle 255N nikel satin finish
160 mm centre-to-centre distance

Pomo 255NP finitura nichel satinato
utilizzato per elementi da 15
con maniglia 255N
Knob hole 255NP nikel satin finish
used for 15 cm elements with handle 255N

A RICHIESTA ON REQUEST

Maniglia 255R finitura rame antico
passo 160 mm
Handle 255R antique copper finish
160 mm centre-to-centre distance

Pomo 255RP finitura rame antico
utilizzato per elementi da 15
con maniglia 255R
Knob hole 255RP antique copper finish
used for 15 cm elements with handle 255R

A RICHIESTA ON REQUEST

Maniglia 255T finitura ottone antico
passo 160 mm
Handle 255T antique brass finish
160 mm centre-to-centre distance

Pomo 255TP finitura ottone antico
utilizzato per elementi da 15
con maniglia 255T
Knob hole 255TP antique brass finish
used for 15 cm elements with handle 255T

A RICHIESTA ON REQUEST

Maniglia 257N finitura nichel satinato
passo 160 mm
Handle 257N nikel satin finish
160 mm centre-to-centre distance

Pomo 257NP finitura nichel satinato
utilizzato per elementi da 15
con maniglia 257N
Knob hole 257NP nikel satin finish
used for 15 cm elements with handle 257N

A RICHIESTA ON REQUEST

Maniglia 257S finitura silver dark
passo 160 mm
Handle 257S dark silver finish
160 mm centre-to-centre distance

Pomo 257SP finitura silver dark
utilizzato per elementi da 15
con maniglia 257S
Knob hole 257SP dark silver finish
used for 15 cm elements with handle 257S

A RICHIESTA ON REQUEST

Maniglia K91 finitura canna di fucile
spazzolato
passo 160 mm
Handle K91 brushed gunmetal finish
160 mm centre-to-centre distance

Pomo 240P finitura canna di fucile
spazzolato
utilizzato per elementi da 15
con maniglia K91
Knob hole 240P brushed gunmetal finish
used for 15 cm elements with handle K91

A RICHIESTA ON REQUEST

Maniglia K91G finitura oro
passo 160 mm
Handle K91G gold finish
160 mm centre-to-centre distance

Pomo K91GP finitura oro
utilizzato per elementi da 15
con maniglia K91G
Knob hole K91GP gold finish
used for 15 cm elements with handle K91G

VERONICA

MANIGLIE HANDLES

A RICHIESTA ON REQUEST

Maniglia 263 finitura nichel opaco
con swarovski
passo 128 mm
Handle 263 matt nickel finish with swarosky crystals
128 mm centre-to-centre distance

Pomo 263P finitura nichel opaco
con swarovski
utilizzata per elementi da 15
con maniglia 263
Knob 263P matt nickel finish with swarosky crystals used for W15 elements with handle 263

A RICHIESTA ON REQUEST

Maniglia 266 finitura argento orientale
passo 128 mm
Handle 266 oriental silver finish
128 mm centre-to-centre distance

Maniglia 266/1 finitura argento orientale
passo 64 mm
utilizzata per elementi da 15
Handle 266/1 oriental silver finish
64 mm centre-to-centre distance
used for W15 elements

A RICHIESTA ON REQUEST

Maniglia 264 finitura argento antico
passo 128 mm
Handle 264 antique silver finish
128 mm centre-to-centre distance

Pomo 264P finitura argento antico
utilizzata per elementi da 15
con maniglia 264
Knob 264P antique silver finish
used for W15 elements
with handle 264

A RICHIESTA ON REQUEST

Maniglia 256P finitura peltro
spazzolato
passo 160 mm
Handle 256P brushed pewter finish
160 mm centre-to-centre distance

Pomo 256PP finitura peltro
spazzolato
utilizzato per elementi da 15
con maniglia 256P
Knob hole 256PP brushed pewter finish
used for 15 cm elements with handle 256P

A RICHIESTA ON REQUEST

Maniglia 224 finitura argento antico
passo 128 mm
Handle 224 with antique silver finish
128 mm centre-to-centre distance

Maniglia 225 finitura argento antico
passo 128 mm
Handle 225 with antique silver finish
128 mm centre-to-centre distance

Pomo 224P finitura argento antico
utilizzata per elementi da 15
con maniglia 224/225
Knob hole 224P with antique silver finish
used for 15 cm elements
with handles 224/225

A RICHIESTA ON REQUEST

Pomo 620 in ceramica colore avorio

Knob hole 620 in ivory ceramic finish

A RICHIESTA ON REQUEST

Maniglia 227 finitura ottone brunito
passo 128 mm
Handle 227 with burnished brass finish
128 mm centre-to-centre distance

Maniglia 228 finitura ottone vecchio
inserto avorio
passo 128 mm
Handle 228 with old brass finish
with ivory insert
128 mm centre-to-centre distance

Pomo 228P finitura ottone vecchio
utilizzata per elementi da 15
con maniglia 227/228
Knob hole 228P with old brass finish
used for 15 cm elements with handle 227/228

LUBE ECOLOGIC

IL GRUPPO LUBE HA SCELTO DI UTILIZZARE PER I COMPONENTI COSTITUENTI LE STRUTTURE DELLE CUCINE SOLO MATERIALE A BASSISSIMA EMISSIONE DI FORMALDEIDE: CONFORMI ALLO STANDARD F★★★★ SECONDO LA NORMA JIS, CERTIFICATO DAL MINISTERO GIAPPONESE, IL PIÙ SEVERO IN MERITO ALLE NORMATIVE DI SALVAGUARDIA AMBIENTALE.

VERONICA

strutture carcasses

NEW

lino effetto tela (opz.8920)
schiena e ripiano conchiglia (opz.8910)
linen melamine-coated canvas effect (opt.8920)
shell back panel and shelf (opt.8910)

NEW

juta effetto tela (opz.9490)
schiena e ripiano visone (opz.948M)
jute melamine-coated canvas effect (opt.9490)
mink back panel and shelf (opt.948M)

NEW

grigio effetto tela (opz.9695)
schiena e ripiano argilla (opz.9690)
grey melamine-coated canvas effect (opt.9695)
clay back panel and shelf (opt.9690)

conchiglia (opz.8910)
schiena e ripiano conchiglia (opz.8910)
shell (opt.8910)
shell back panel and shelf (opt.8910)

visone (opz.948M)
schiena e ripiano visone (opz.948M)
mink (opt.948M)
mink back panel and shelf (opt.948M)

bianco (opz.001)
schiena e ripiano bianco (opz.001)
white (opt.001)
white back panel and shelf (opt.001)

argilla (opz.9690)
schiena e ripiano argilla (opz.9690)
clay (opt.9690)
clay back panel and shelf (opt.9690)

fango (opz.8860)
schiena e ripiano fango (opz.8860)
mud (opt.8860)
mud back panel and shelf (opt.8860)

lavagna (opz.9620)
schiena e ripiano lavagna (opz.9620)
slate grey (opt.9620)
slate grey back panel and shelf (opt.9620)

castagno tinto noce (opz.582)
schiena e ripiano bianco (opz.001)
walnut-stained chestnut (opt. 582)
white back panel and shelf (opt.001)

VERONICA

mensole in laminato laminate shelves

conchiglia (opz.8910)
shell (opt.8910)

visone (opz.948M)
mink (opt.948M)

bianco (opz.001)
white (opt.001)

argilla (opz.9690)
clay (opt.9690)

fango (opz.8860)
mud (opt.8860)

lavagna (opz.9620)
slate grey (opt.9620)

castagno tinto noce (opz.582)
walnut-stained chestnut (opt.582)

mensole impiallacciate veneered shelves

bianco decapè (opz.583)
pickled white (opt. 583)

argilla decapè grigio (opz.587)
pickled clay grey (opt. 587)

tinto bianco assoluto decapè grigio (opz.588)
walnut white absolute pickled grey (opt. 588)

tinto noce (opz.589)
walnut-stained (opt. 589)

bianco artico (opz.590)
arctic white (opt. 590)

cammello (opz.592)
camel (opt. 592)

grigio fumo (opz.594)
smoke grey (opt. 594)

sahara (opz.591)
sahara (opt. 591)

grigio luce (opz.593)
light grey (opt. 593)

piombo (opz.598)
lead (opt. 598)

grigio reale (opz.595)
royal grey (opt. 595)

VERONICA

zoccoli in pvc H 15 pvc plinths H 15

bianco decapè (opz.003)
pickled white (opt. 003)

argilla decapè grigio (opz.587)
pickled clay grey (opt. 587)

tinto bianco assoluto decapè grigio (opz.588)
walnut white absolute pickled grey (opt. 588)

tinto noce (opz.589)
walnut-stained (opt. 589)

bianco artico (opz.590)
arctic white (opt. 590)

cammello (opz.592)
camel (opt. 592)

grigio fumo (opz.594)
smoke grey (opt. 594)

tortora (opz.2456)
dove grey (opt. 2456)

grigio luce (opz.593)
light grey (opt. 593)

piombo (opz.598)
lead (opt. 598)

grigio reale (opz.595)
royal grey (opt. 595

zoccolo impiallacciati H 15 veneered plinth H 15

bianco decapè (opz.583)
pickled white (opt. 583)

argilla decapè grigio (opz.587)
pickled clay grey (opt. 587)

tinto bianco assoluto decapè grigio (opz.588)
walnut white absolute pickled grey (opt. 588)

tinto noce (opz.589)
walnut-stained (opt. 589)

bianco artico (opz.590)
arctic white (opt. 590)

cammello (opz.592)
camel (opt. 592)

grigio fumo (opz.594)
smoke grey (opt. 594)

sahara (opz.591)
sahara (opt. 591)

grigio luce (opz.593)
light grey (opt. 593)

piombo (opz.598)
lead (opt. 598)

grigio reale (opz.595)
royal grey (opt. 595)

VERONICA

cornici cappello top cornices

bianco decapè (opz.583)
pickled white (opt. 583)

argilla decapè grigio (opz.587)
pickled clay grey (opt. 587)

tinto bianco assoluto decapè grigio (opz.588)
walnut white absolute pickled grey (opt. 588)

tinto noce (opz.589)
walnut-stained (opt. 589)

bianco artico (opz.590)
arctic white (opt. 590)

cammello (opz.592)
camel (opt. 592)

grigio fumo (opz.594)
smoke grey (opt. 594)

sahara (opz.591)
sahara (opt. 591)

grigio luce (opz.593)
light grey (opt. 593)

piombo (opz.598)
lead (opt. 598)

grigio reale (opz.595)
royal grey (opt. 595)

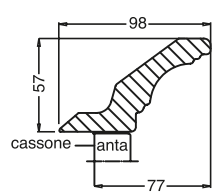

disegno cornice design cornice

VERONICA

APERTURA VERTICALE

L'anta ad apertura verticale, potendo essere sollevata completamente verso l'alto, consente un accesso totale all'interno del pensile. Ideale per l'impiego in mobili a colonna per nascondere ad esempio apparecchi elettrici, o pensili con corpi mobili sovrastanti, ha la chiusura ammortizzata e la possibilità di regolare la forza di tenuta in base al peso del frontale.

VERTICAL OPENING

Doors with vertical opening movement can be fully raised to fully access the inside of the wall unit.

Ideal for use on column units to conceal electrical appliances for examples, or on wall units surmounted by mobile units.

The closing movement is cushioned and the closing force can be adjusted according to the weight of the front door.

DI SERIE
STANDARD

MOTORIZZATO SERVO-DRIVE
SERVO-DRIVE MOTORISED
(Opz.007)

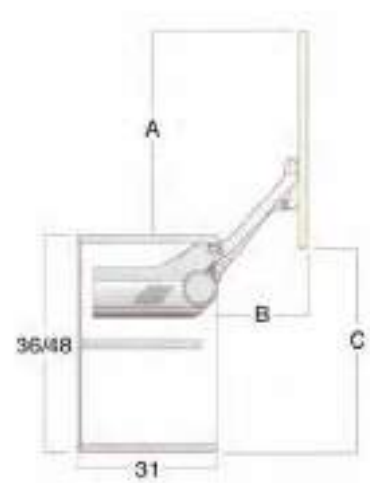

	A	B	C	
H 36	34	23,5	34,5	
H 48	43	28,5	43,5	

PENSILE CON APERTURA ANTE A PACCHETTO

Il meccanismo d'apertura ante a pacchetto è idoneo sia sul pensile H 72 che H 96; la regolazione della forza di apertura può essere impostata in modo esatto in base ai pesi dei frontali, la chiusura è ammortizzata e la cerniera centrale clip si contraddistingue per l'innovativa tecnologia che garantisce la sicurezza per le dita.

WALL UNIT WITH LIFT-UP FOLDING DOOR

The lift-up folding door opening mechanism is suitable for wall units with H 72 or H 96; the opening force can be adjusted precisely according to the weight of the fronts, while the closing movement is cushioned and the central clip-on hinge features innovative technology for safeguarding the fingers.

H 72

H 96

DI SERIE
STANDARD

MOTORIZZATO SERVO-DRIVE
SERVO-DRIVE MOTORISED (Opz.007)

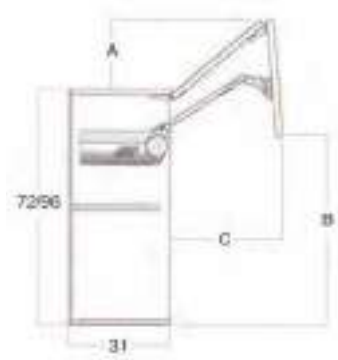

	A	B	C
H 72	16,5	54	41
H 96	20	69	53

SCHEMA MONTAGGIO LIMITATORE
LIMITER INSTALLATION DIAGRAM

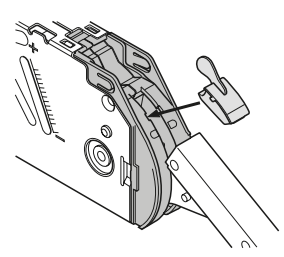

Per evitare l'interferenza dell'anta in fase di apertura con cornici o mensole, si può richiedere il limitatore dell'angolo di apertura cod. 5620005

In order to avoid that the door interferes with cornices or shelves during the opening movement, it is possible to request an opening angle limiter: code 5620005

PENSILI RIBALTA CHIUSURA BLUMOTION

FLAP DOOR WALL UNITS BLUMOTION CLOSING SYSTEM

PENSILE CON APERTURA A RIBALTA

Le ante aprendosi verso l'alto consentono di avere un' ampia visione d'insieme all'interno del mobile. In questo modo è possibile un comodo accesso agli oggetti contenuti al suo interno e, dal punto di vista ergonomico, molto vantaggioso. La regolazione della forza di apertura può essere impostata in modo esatto in base al peso del frontale. Grazie all'arresto progressivo le ante si fermano in qualsiasi posizione; in questo modo la maniglia è sempre facilmente raggiungibile. La chiusura è ammortizzata e un'unica manovra è sufficente per regolare il frontale tridimensionalmente grazie all'assenza di cerniere e al sistema di aggancio clip.

WALL UNIT WITH FLAP DOOR

The doors that open upwards guarantee ample overall visibility inside the cabinet. In this way, all objects housed inside the cabinet can be comfortably accessed, making the system highly advantageous from an ergonomic perspective. The opening force can be adjusted precisely depending on the weight of the front. The doors stop in any position thanks to the gradual stopping movement; in this way, the handle is always easily accessible. The closing movement is cushioned and a single manoeuvre is required to three-dimensionally adjust the front, thanks to the clip-on system and the absence of hinges.

DI SERIE
STANDARD

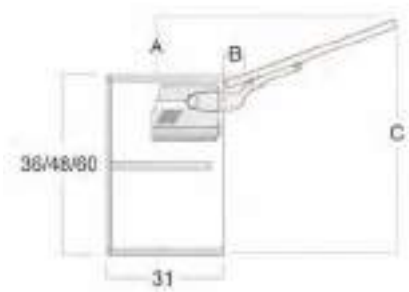

	A	B	C
H 36	11,5	3,5	37
H 48	15	3,5	49
H 60	18,5	3,5	61

Per evitare l'interferenza dell'anta in fase di apertura con cornici o mensole, si può richiedere il limitatore dell'angolo di apertura cod. 5620010

In order to avoid that the door interferes with cornices or shelves during the opening movement, it is possible to request an opening angle limiter: code 5620010

MOTORIZZATO SERVO-DRIVE
SERVO-DRIVE MOTORISED (Opz.007)

SCHEMA MONTAGGIO LIMITATORE PER RIBALTA H 36
FLAP DOOR LIMITER INSTALLATION DIAGRAM H 36

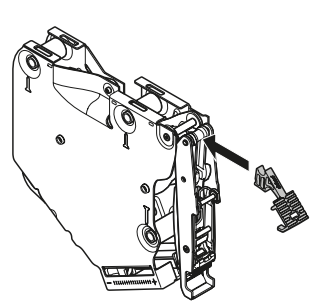

SCHEMA MONTAGGIO LIMITATORE PER RIBALTA H 48
FLAP DOOR LIMITER INSTALLATION DIAGRAM H 48

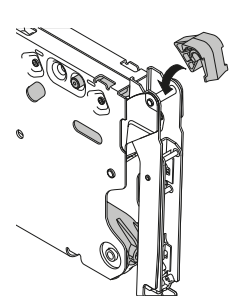

TIPOLOGIE CAPPE CAMINO

CHIMNEY HOOD TYPES

cappa tipo “S”

chimney type “S”

cappa tipo “SN”

chimney type “SN”

cappa tipo “I”

chimney type “I”

cappa tipo “IN”

chimney type “IN”

TIPOLOGIE CAPPE CAMINO

CHIMNEY HOOD TYPES

cappa tipo “L”

chimney type “L”

cappa tipo “LN”

chimney type “LN”

cappa tipo “E”

chimney type “E”

cappa tipo “AV”

chimney type “AV”

TIPOLOGIE CAPPE CAMINO

CHIMNEY HOOD TYPES

cappa isola

chimney island

cappa isola con piastrelle

chimney island with tiles

cappa isola tipo “AV”

chimney island type “AV”

SCHEMA CAPPA CAMINETTO AD ANGOLO

CORNER CHIMNEY HOOD DIAGRAM

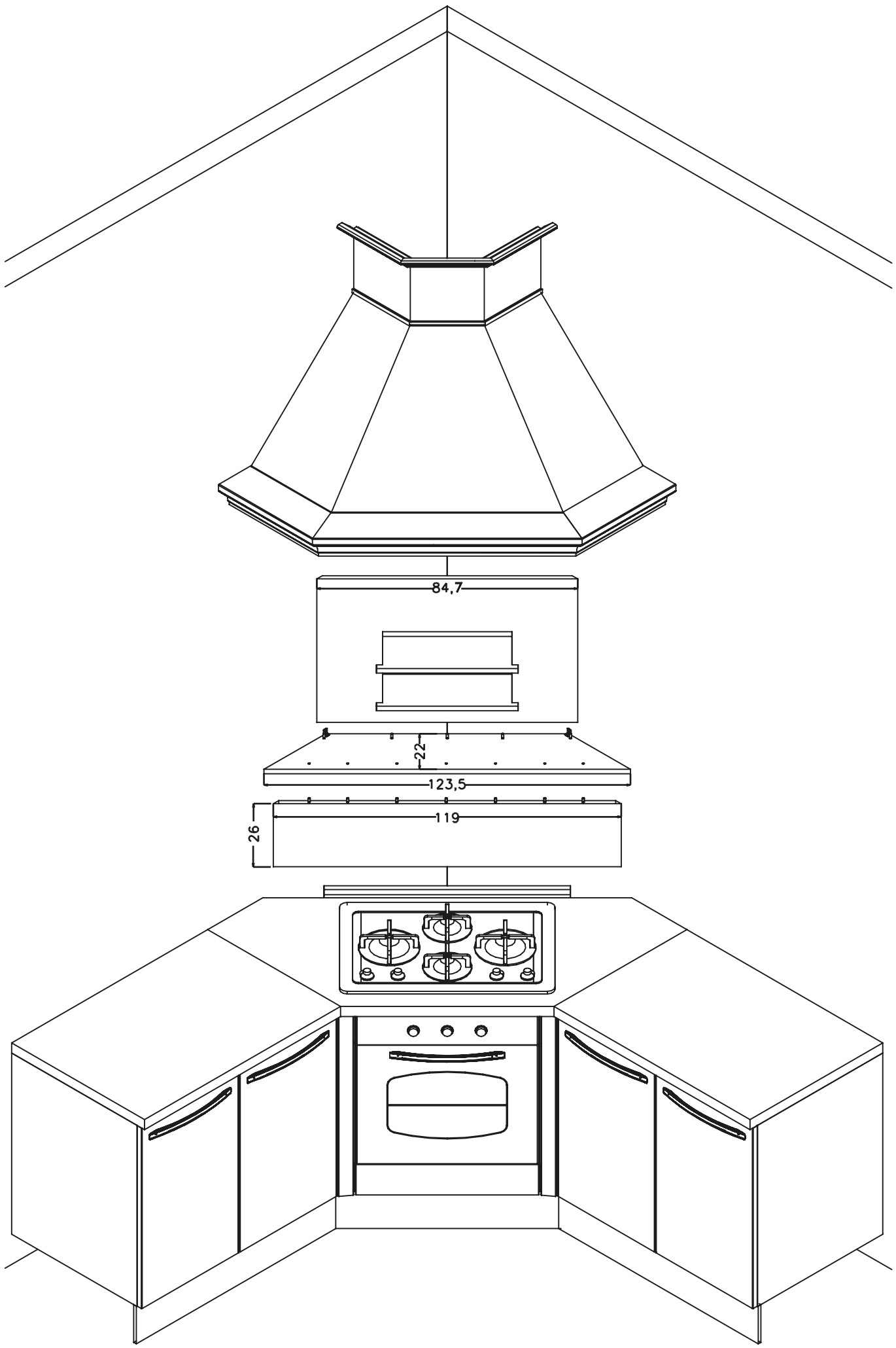

SCHEMA CAPPA CAMINETTO AD ANGOLO

CORNER CHIMNEY HOOD DIAGRAM

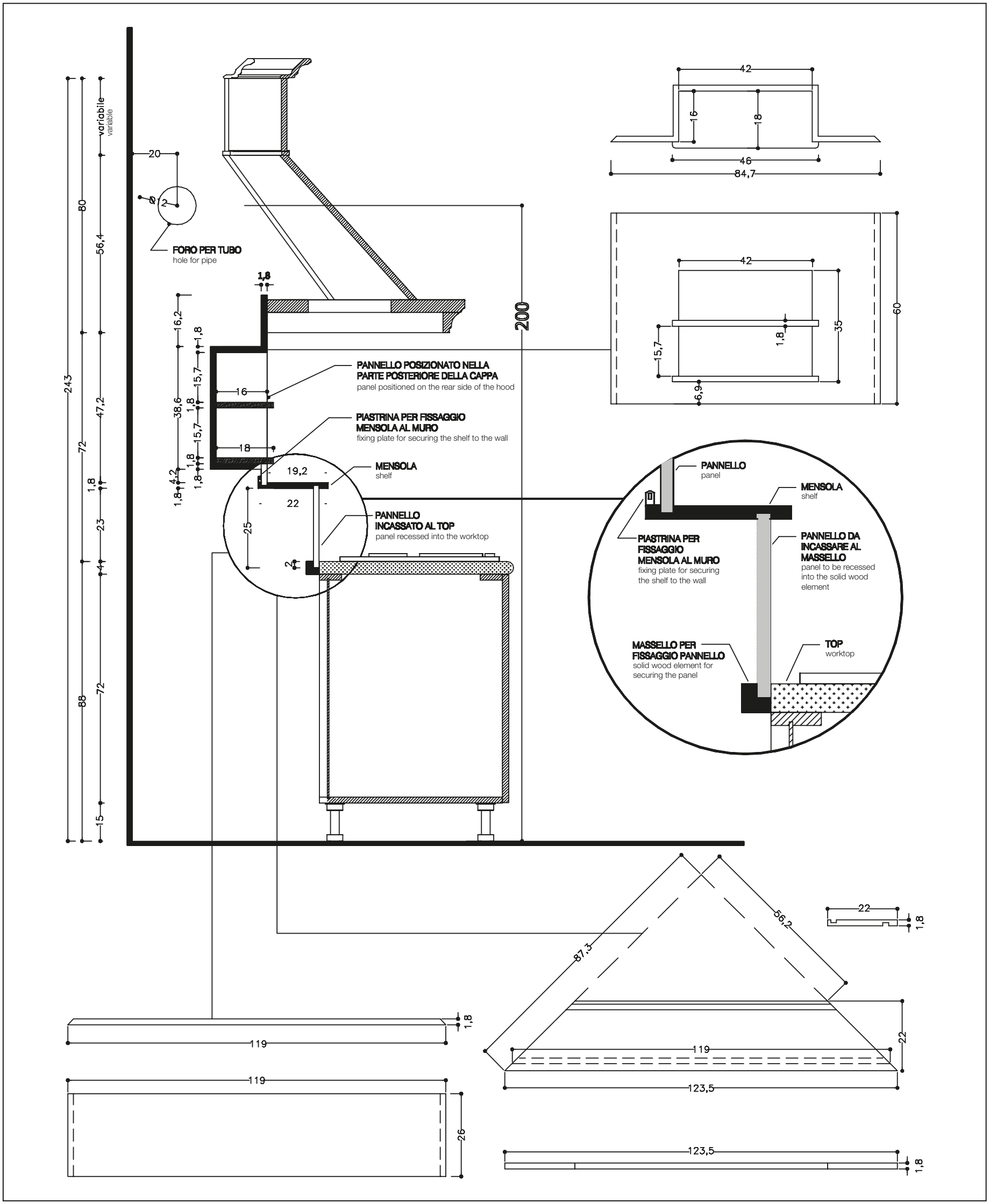

VERONICA

COLORI PIASTRELLE PER CAPPE

TILE COLOURS FOR HOODS

Serie: SASSI DEL PIAVE

Range: SASSI DEL PIAVE

botticino
(opz.120)
botticino

travertino noce
(opz.125)
walnut travertine

scabas
(opz.110)
scabas

giallo dorè
(opz.112)
golden yellow

travertino chiaro
(opz.127)
light travertine

COLORI EFFETTO MURO PER CAMINI CAPPE

WALL EFFECT COLOURS FOR CHIMNEY HOODS

BIANCO ASSOLUTO
a rullo (opz.R005)
frattonato (opz.F005)

ABSOLUTE WHITE
for roller (opt.R005)
for trowel (opt.F005)

CIPRIA
a rullo (opz.R114)
frattonato (opz.F114)

PALE PINK
for roller (code R114)
for trowel (code F114)

PANNA
a rullo (opz.R012)
frattonato (opz.F012)

CREAM
for roller (code R012)
for trowel (code F012)

CORDA
a rullo (opz.R125)
frattonato (opz.F125)

JUTE
for roller (code R125)
for trowel (code F125)

GRIGIO TRAFFICO
a rullo (opz.R260)
frattonato (opz.F260)

TRAFFIC GREY
for roller (opt.R260)
for trowel (opt.F260)

GRIGIO PERLA
a rullo (opz.R255)
frattonato (opz.F255)

PEARL GREY
for roller (code R255)
for trowel (code F255)

GIALLO CHIARO
a rullo (opz.R023)
frattonato (opz.F023)

LIGHT YELLOW
for roller (code R023)
for trowel (code F023)

CUOIO
a rullo (opz.R250)
frattonato (opz.F250)

LEATHER
for roller (code R250)
for trowel (code F250)

VIVI IL LIVING

LIVE THE LIVING

La grande componibilità degli elementi pensili e delle basi sospese consente di creare composizioni living perfettamente coordinate con la cucina.

Versatile fitting solutions for living room wall units and suspended base units coordinated with kitchen spaces.

ANTA
door

BIANCO ASSOLUTO
DECAPÈ GRIGIO
absolute white pickled grey

STRUTTURA
carcass

GRIGIO EFFETTO TELA
grey canvas effect

LIVING LV 01

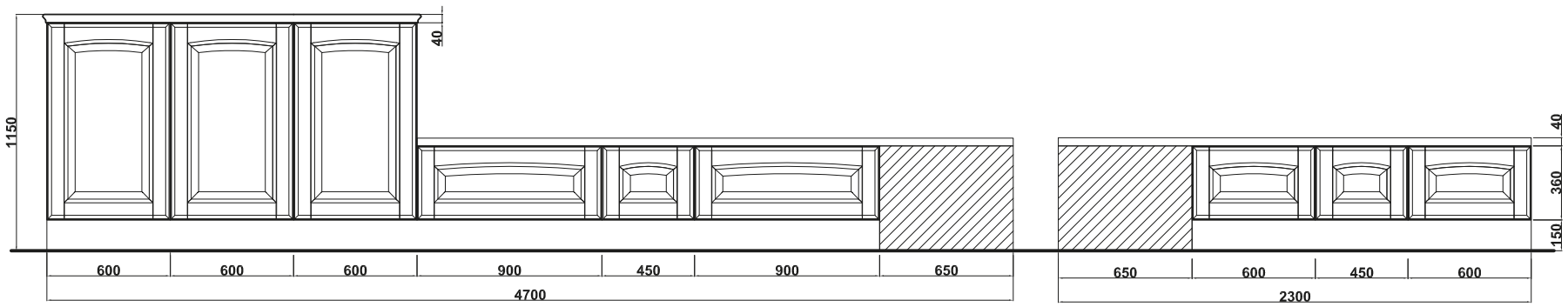

NR. ELEMENTI	DESCRIZIONE	CODICE
2	Colonna L 60 H 96 P 60,1 apertura push-pull, 1 fianco come anta	E6040601/2
1	Colonna L 60 H 96 P 60,1 apertura push-pull	E6040601/2
2	Base living L 90 H 36 P 60,1, cestone apertura tip-on	E4204900
2	Base living L 45 H 36 P 60,1, apertura push-pull	E4026451/2
1	Base living L 60 H 36 P 60,1, apertura push-pull	E4026601/2
1	Base living L 60 H 36 P 60,1, apertura push-pull, 1 fianco come anta	E4026601/2
1	Base angolo 65x65 H 36 P 60,1 (solo angolare)	E4480360
1	Top L 183,8 P 62 SP.4 agglomerato di marmo grigio carnico	al ml TAMS406
2	Maggiorazione finitura laterale come frontale top	T9LFT
1	Mensola L 290 P 61 SP.3,8 impiallacciata come anta	al ml 091729
1	Mensola L 169 P 61 SP.3,8 impiallacciata come anta	al ml 091729
1	Zoccolo L 606 H 15 impiallacciato come anta	al ml 092500
2	Zoccolo laterale H 15 con angolare impiallacciato come anta	092521/2
1	Giunzione 90° H 15 per zoccolo impiallacciato come anta	092550
1	Giunzione lineare H 15 per zoccolo impiallacciato come anta	092551

No. of ELEMENTS	DESCRIPTION	CODE
2	Column W 60 H 96 D 60,1 push-pull opening, 1 side same as door	E6040601/2
1	Column W 60 H 96 D 60,1 push-pull opening	E6040601/2
2	Living base unit W 90 H 36 D 60,1, deep drawer tip-on opening	E4204900
2	Living base unit W 45 H 36 D 60,1, push-pull opening	E4026451/2
1	Living base unit W 60 H 36 D 60,1, push-pull opening	E4026601/2
1	Living base unit W 60 H 36 D 60,1 push-pull opening, 1 side same as door	E4026601/2
1	Corner base unit W 65x65 H 36 D 60,1 (only angular filler)	E4480360
1	Marble agglomerate grey carnico worktop W 183,8 D 62 TH.4	per lm TAMS406
2	Surcharge for side profile to match front profile worktop	T9LFT
1	Veneered shelf W 290 D 61 TH.3,8 same colour as door	per lm 091729
1	Veneered shelf W 169 D 61 TH.3,8 same colour as door	per lm 091729
1	Veneered plinth W 606 H 15 same colour as door	per lm 092500
2	Veneered lateral plinth H 15 with angular same colour as door	092521/2
1	Junction at 90° for veneered H 15 same colour as door	092550
1	Linear junction for veneered plinth H 15 same colour as door	092551

ANTA
door

STRUTTURA
carcass

LIVING LV 02

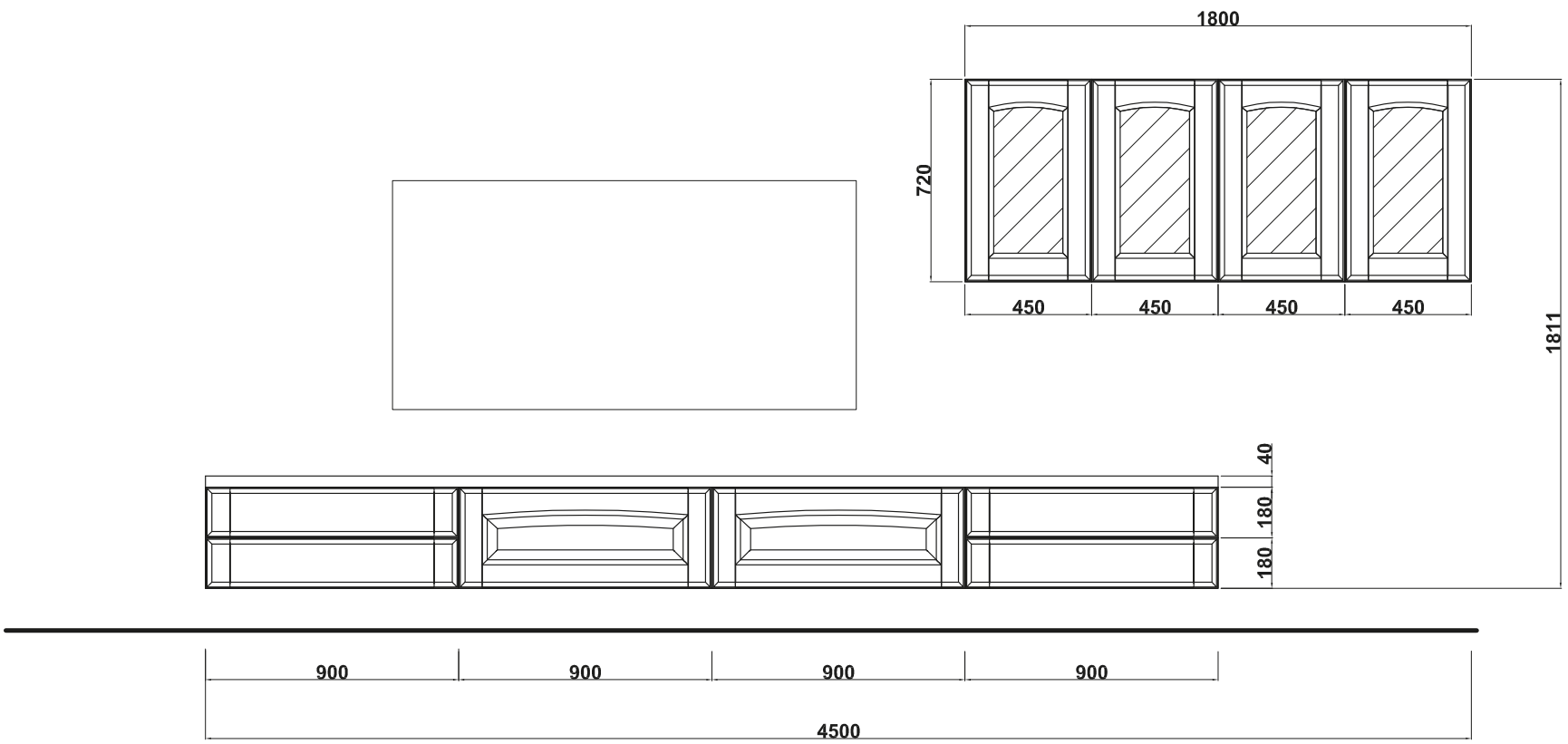

NR. ELEMENTI	DESCRIZIONE	CODICE
2	Pensile vetro molato L 90 H 72 P 33,6 apertura push-pull, ripiano in vetro,	
	1 fianco come anta	E1010900
2	Base living sospesa L 90 H 36 P 50,6 2 cassetti apertura tip-on,	
	1 fianco come anta	EBL73900
2	Base living sospesa L 90 H 36 P 50,6 1 cestone apertura tip-on	EBL75900
2	Top L 180 P 50,6 SP.4 dekton entzo opaco profilo P al ml	TDEP405
2	Maggiorazione finitura laterale come frontale top	T9LFT
1	Asta appendipensili ml 2	08610501

No. of ELEMENTS	DESCRIPTION	CODE
2	Bevelled glass wall unit W 90 H 72 D 33,6 push-pull opening, glass shelf,	
	1 side same as door	E1010900
2	Hanging living base unit W 90 H 36 D 50,6 2 drawers tip-on opening,	
	1 side same as door	EBL73900
2	Hanging living base unit W 90 H 36 D 50,6 1 deep drawer tip-on opening	EBL75900
2	Dekton matt entzo P profile worktop W 180 D 50,6 TH.4 per lm	TDEP405
2	Surcharge for side profile to match front profile worktop	T9LFT
1	Wall unit fixing strip lm 2	08610501

ANTA
door

STRUTTURA
carcass

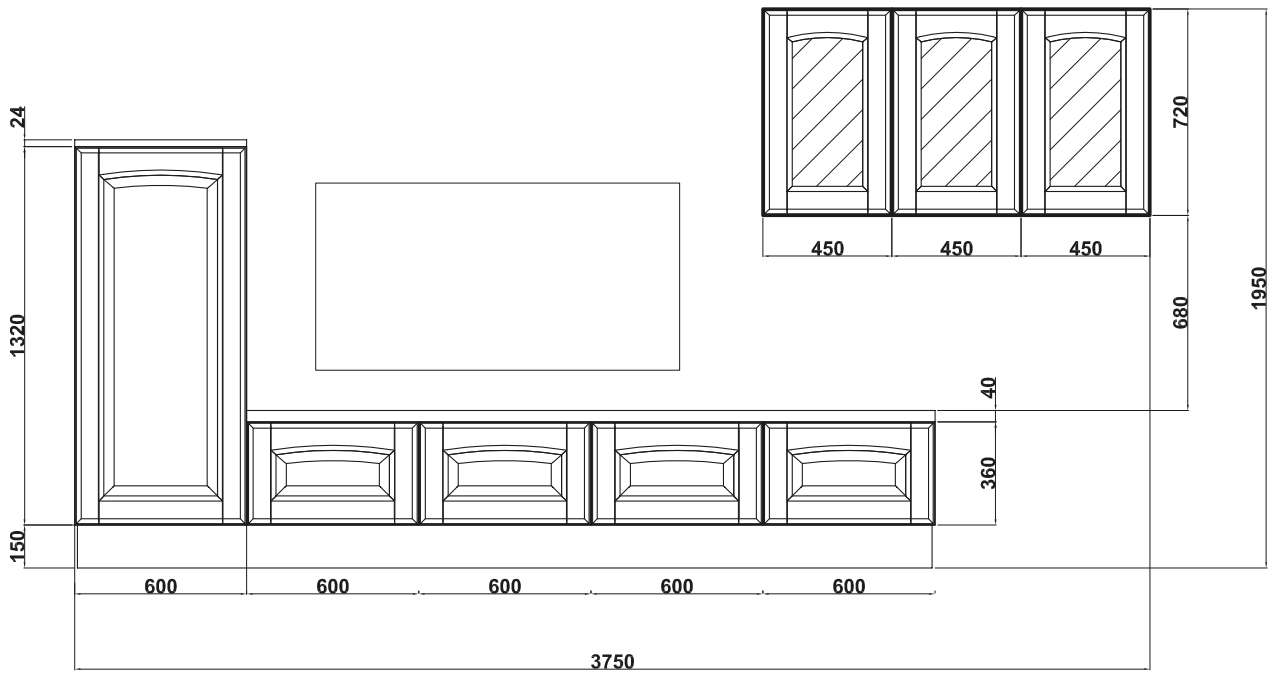

NR. ELEMENTI	DESCRIZIONE	CODICE
2	Pensile vetro molato L 45 H 72 P 33,6 apertura push-pull, ripiano in vetro,	
	1 fianco come anta	E1010451/2
1	Pensile vetro molato L 45 H 72 P 33,6 apertura push-pull, ripiano in vetro	E1010451/2
1	Colonna L 60 H 132 P 60,1 apertura push-pull, fianchi come anta	E6050601/2
3	Base living L 60 H 36 P 60,1 apertura push-pull	E4026601/2
1	Base living L 60 H 36 P 60,1 apertura push-pull, 1 fianco come anta	E4026601/2
1	Top living L 60 P 60,1 SP. 2,4 impiallacciato come anta	al ml TIL248
1	Top L 240 P 61 SP. 4 laminam arabescato opaco	al ml TLNP405
2	Maggiorazione finitura laterale come frontale top	T9LFT
1	Zoccolo L 300 H 15 impiallacciato come anta	al ml 092500
2	Zoccolo laterale H 15 con angolare impiallacciato come anta	092521/2
1	Asta appendipensili ml 2	08610501

No. of ELEMENTS	DESCRIPTION	CODE
2	Bevelled glass wall unit W 45 H 72 D 33,6 push-pull opening, glass shelf,	
	1 side same as door	E1010451/2
1	Bevelled glass wall unit W 45 H 72 D 33,6 push-pull opening, glass shelf	E1010451/2
1	Column W 60 H 132 D 60,1 push-pull opening, sides same as door	E6050601/2
3	Living base unit W 60 H 36 D 60,1 push-pull opening	E4026601/2
1	Living base unit W 60 H 36 D 60,1 push-pull opening, 1 side same as door	E4026601/2
1	Veneered living worktop W 60 D 60,1 TH.2,4 same colour as door	per lm TIL248
1	Laminam matt arabesque worktop W 240 D 61 TH.4	per lm TLNP405
2	Surcharge for side profile to match front profile worktop	T9LFT
1	Veneered plinth W 300 H 15 same colour as door	per lm 092500
2	Veneered lateral plinth H 15 with angular same colour as door	092521/2
1	Wall unit fixing strip lm 2	08610501

ANTA
door

STRUTTURA
carcass

NR. ELEMENTI	DESCRIZIONE	CODICE
2	Colonna vetro molato L 60 H 132 P 60,1 apertura push-pull, ripiani in vetro,	
	1 fianco come anta	E6180601/2
1	Colonna vetro molato L 60 H 132 P 60,1 apertura push-pull, ripiani in vetro	E6180601/2
4	Base living L 60 H 48 P 60,1 apertura push-pull	E4028601/2
1	Base living L 60 H 48 P 60,1 apertura push-pull, 1 fianco come anta	E4028601/2
1	Top living L 180 P 60,1 SP. 2,4 impiallacciato come anta	al ml TIL248
1	Top living L 300 P 60,1 SP. 2,4 impiallacciato come anta	al ml TIL248
1	Zoccolo L 480 H 15 impiallacciato come anta	al ml 092500
2	Zoccolo laterale H 15 con angolare impiallacciato come anta	092521/2
1	Giunzione lineare H 15 per zoccolo impiallacciato come anta	092551

No. of ELEMENTS	DESCRIPTION	CODE
2	Bevelled glass column W 60 H 132 D 60,1 push-pull opening, glass shelves,	
	1 side same as door	E6180601/2
1	Bevelled glass column W 60 H 132 D 60,1 push-pull opening, glass shelves	E6180601/2
4	Living base unit W 60 H 48 D 60,1 push-pull opening	E4028601/2
1	Living base unit W 60 H 48 D 60,1 push-pull opening, 1 side same as door	E4028601/2
1	Veneered living worktop W 180 D 60,1 TH.2,4 same colour as door	per lm TIL248
1	Veneered living worktop W 300 D 60,1 TH.2,4 same colour as door	per lm TIL248
1	Veneered plinth W 480 H 15 same colour as door	per lm 092500
2	Veneered lateral plinth H 15 with angular same colour as door	092521/2
1	Linear junction for veneered plinth H 15 same colour as door	092551

ANTA
door

STRUTTURA
carcass

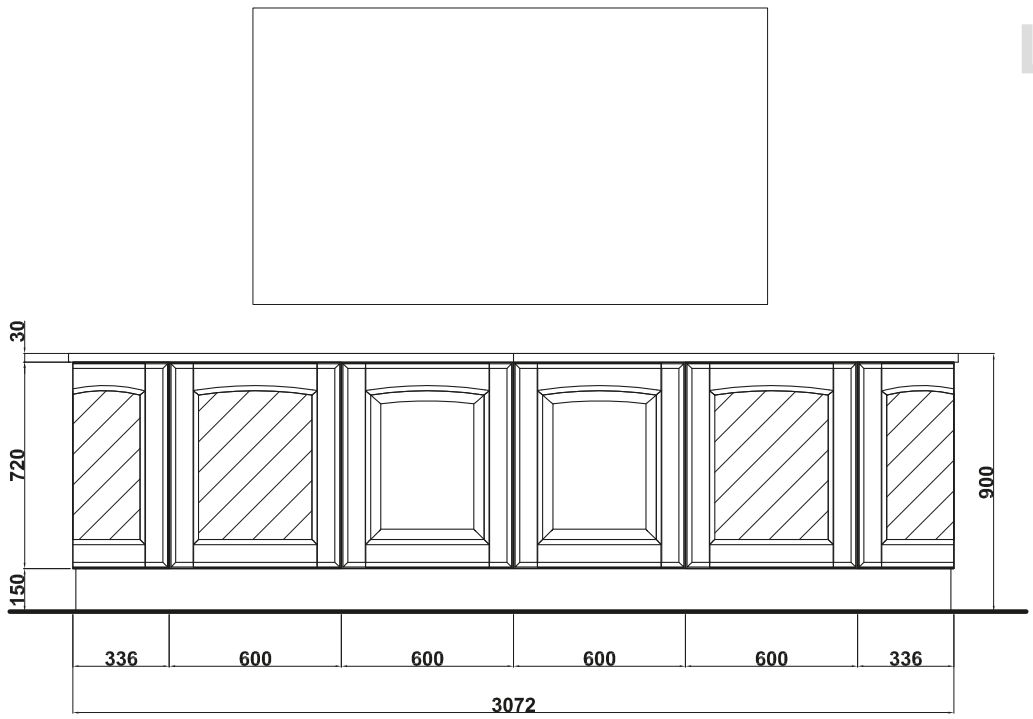

NR. ELEMENTI	DESCRIZIONE	CODICE
2	Base terminale L 33,6 H 72 P 60,1, anta vetro curva + anta chiusa, apertura push-pull, predisposta per faretto, 2 ripiani vetro	E4663321/2
2	Faretto “ATOM” led finitura alluminio	08617086
1	Alimentatore per faretto “ATOM” 15W	08617150
2	Base L 60 H 72 P 60,1, anta vetro, apertura push-pull, 2 ripiani vetro	E4014601/2
4	Profilo led L 60 per ripiano vetro	08616233
1	Alimentatore per profilo led 50W	08616192
2	Base L 60 H 72 P 60,1, apertura push-pull	E4010601/2
2	Top L 154,5 P 61 SP.3 granito nero africa lucido	al ml TGRP305
2	Maggiorazione per lavorazione terminale stondato su top	T9TE2
1	Zoccolo L 240 H 15 impiallacciato come anta	al ml 092500
2	Zoccolo terminale curvo H 15 impiallacciato come anta	092541/2
2	Giunzione lineare H 15 per zoccolo impiallacciato come anta	092551

No. of ELEMENTS	DESCRIPTION	CODE
2	End base unit W 33,6 H 72 D 60,1 curved glass door + full door, push-pull opening, configured for spotlight, 2 glass shelves	E4663321/2
2	“ATOM” led spotlight aluminium finish	08617086
1	Power supply for “ATOM” spotlight 15W	08617150
2	Base unit W 60 H 72 D 60,1, glass door, push-pull opening, 2 glass shelves	E4014601/2
4	Led profile W 60 for glass shelf	08616233
1	Power supply for led profile 50W	08616192
2	Base unit W 60 H 72 D 60,1, push-pull opening	E4010601/2
2	Granite polished africa black worktop W 154,5 D 61 TH.3	per lm TGRP305
2	Rounded end unit surcharge for worktop	T9TE2
1	Veneered plinth W 240 H 15 same colour as door	per lm 092500
2	Veneered curved terminal plinth H 15 same colour as door	092541/2
2	Veneered junction for plinth H 15 same colour as door	092551

ANTA
door

STRUTTURA
carcass

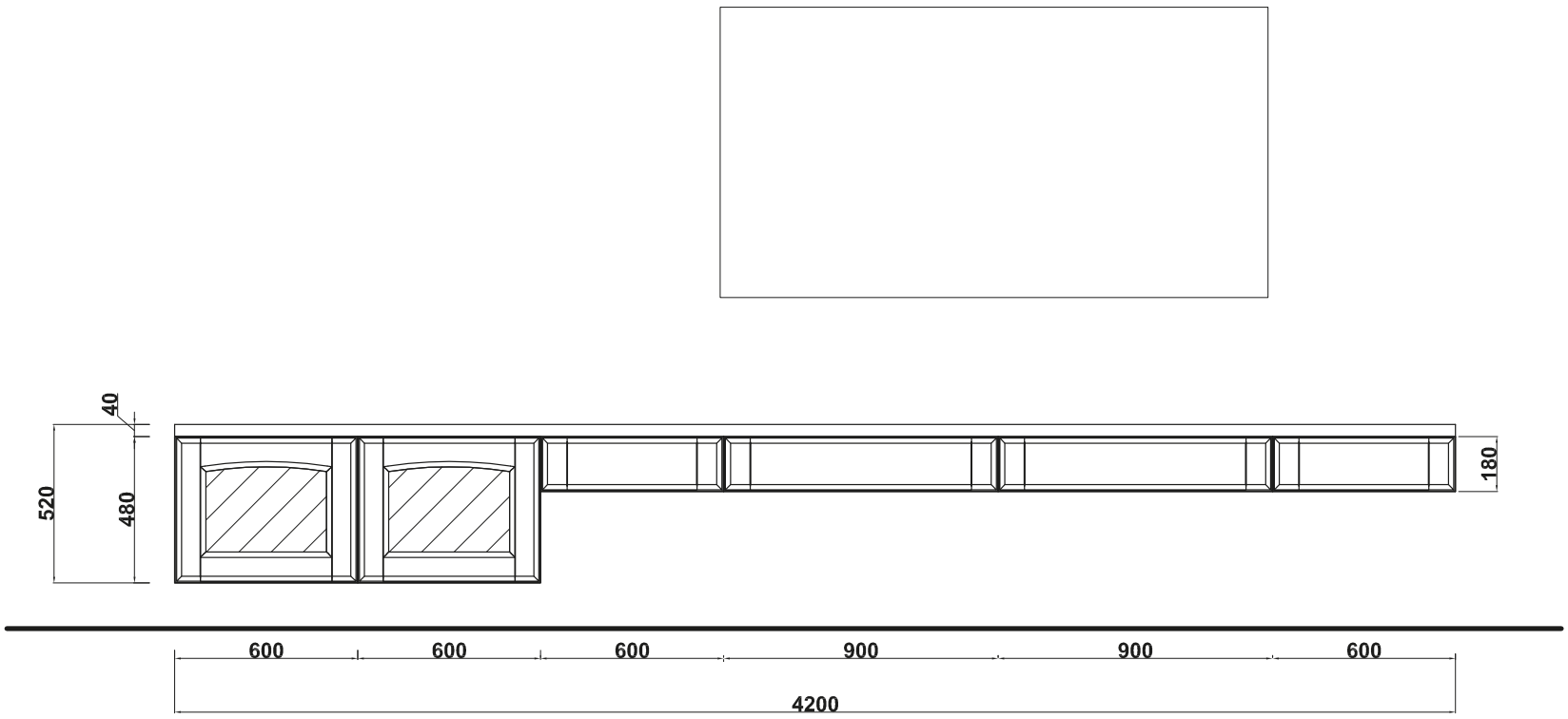

ELEMENTI	DESCRIZIONE		CODICE
2	Base living sospesa a vetro L 60 H 48 P 50,6, apertura push-pull,		
	1 fianco come anta		EBL80601/2
1	Base living sospesa L 60 H 18 P 50,6, cassetto apertura tip-on		EBL72600
1	Base living sospesa L 60 H 18 P 50,6, cassetto apertura tip-on,		
	1 fianco come anta		EBL72600
2	Base living sospesa L 90 H 18 P 50,6, cassetto apertura tip-on		EBL72900
1	Top L 120 P 50,6 SP.4 dekton kelya opaco profilo P	al ml	TDEP405
1	Top L 300 P 50,6 SP.4 dekton kelya opaco profilo P	al ml	TDEP405
2	Maggiorazione finitura laterale come frontale top		T9LFT
			TOTALE

No. of ELEMENTS	DESCRIPTION		CODE
2	Hanging living base unit glass door W 60 H 48 D 50,6 push-pull opening,		
	1 side same as door		EBL80601/2
1	Hanging living base unit W 60 H 18 D 50,6, 1 drawer tip-on opening		EBL72600
1	Hanging living base unit W 60 H 18 D 50,6, 1 drawer tip-on opening,		
	1 side same as door		EBL72600
2	Hanging living base unit W 90 H 18 D 50,6, 1 drawer tip-on opening		EBL72900
1	Dekton matt kelia P profile worktop W 120 D 50,6 TH.4	per lm	TDEP405
1	Dekton matt kelia P profile worktop W 300 D 50,6 TH.4	per lm	TDEP405
2	Surcharge for side profile to match front profile worktop		T9LFT
			TOTAL

ANTA
door

STRUTTURA
carcass

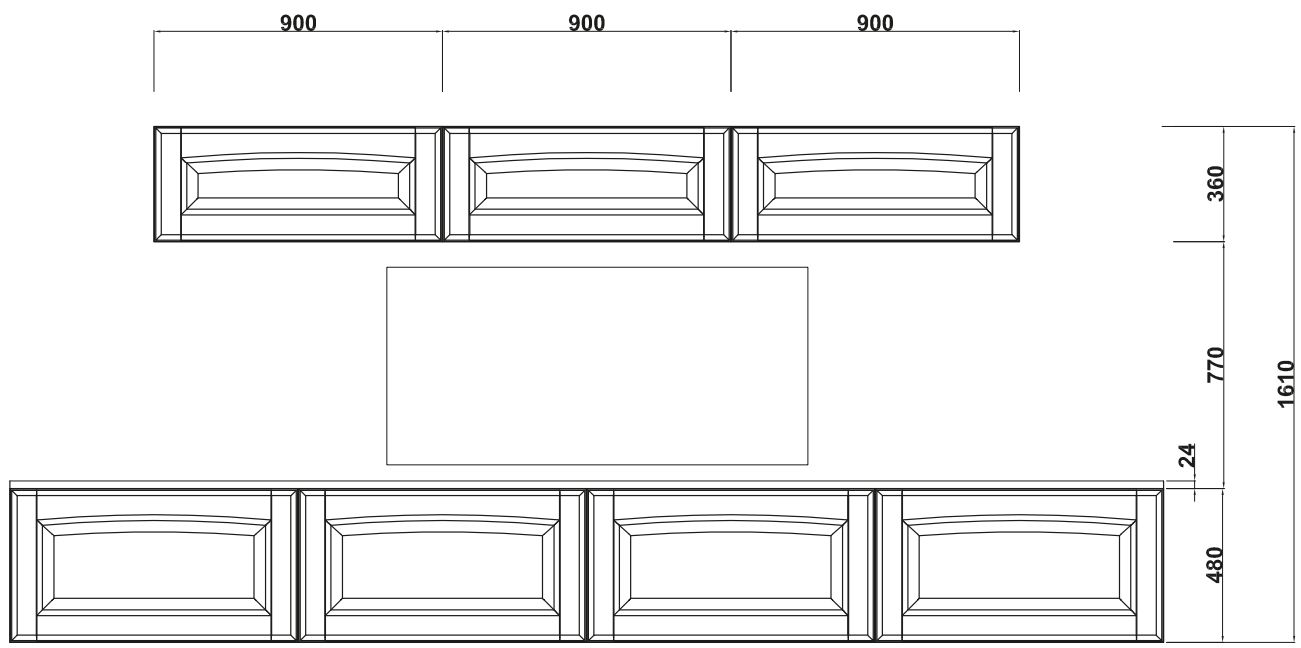

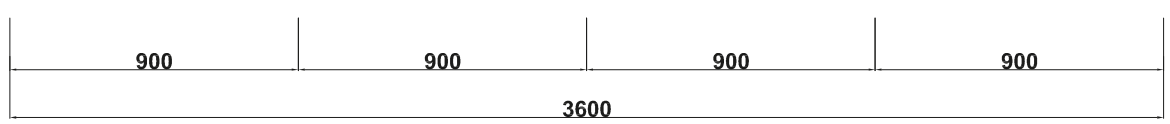

NR. ELEMENTI	DESCRIZIONE	CODICE
2	Pensile L 90 H 36 P 33,6 ribalta, 1 fianco come anta	E2100900
1	Pensile L 90 H 36 P 33,6 ribalta	E2100900
2	Base living sospese L 90 H 48 P 50,6, cestone, 1 fianco come anta	EBL85900
2	Base living sospese L 90 H 48 P 50,6, cestone	EBL85900
2	Top living L 180 P 50,6 SP. 2,4 impiallacciato come anta al ml	TIL246
2	Asta appendipensili ml 2	08610501
		TOTALE

No. of ELEMENTS	DESCRIPTION	CODE
2	Wall unit W 90 H 36 D 33,6 flap door, 1 side same as door	E2100900
1	Wall unit W 90 H 36 D 33,6 flap door	E2100900
2	Hanging living base unit W 90 H 48 D 50,6 deep drawer, 1 side same as door	EBL85900
2	Hanging living base unit W 90 H 48 D 50,6 deep drawer	EBL85900
2	Veneered living worktop W 180 D 50,6 TH.2,4 same colour as door per lm	TIL246
2	Wall unit fixing strip lm 2	08610501
		TOTAL

VERONICA

MODULARITÀ E COMPONIBILITÀ MODULARITY AND FITTING SOLUTIONS

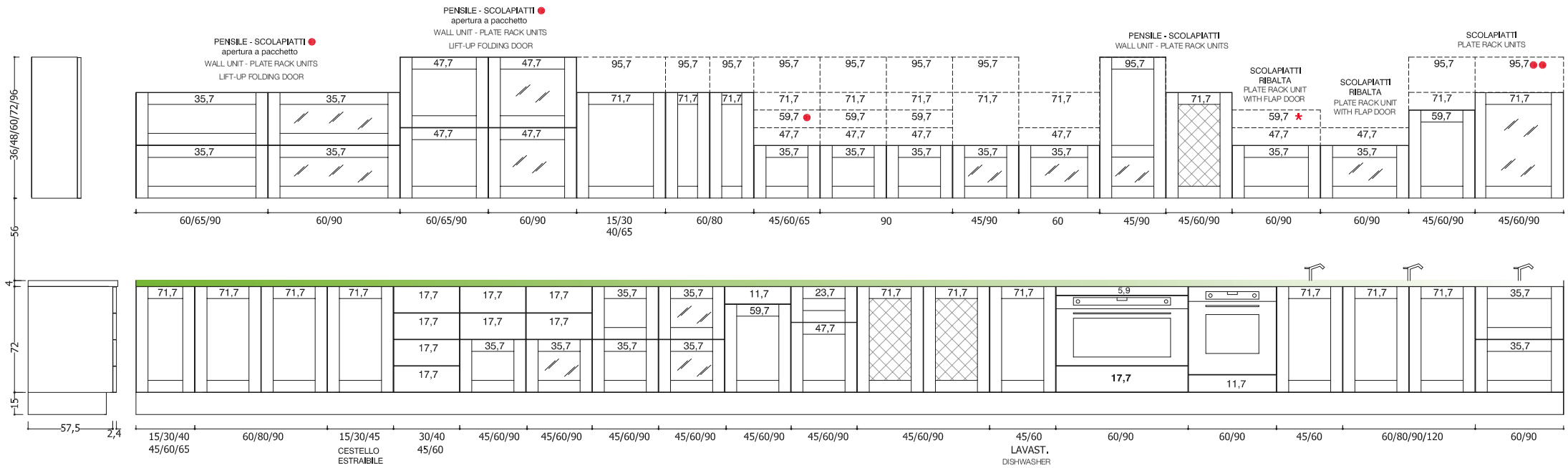

* SOLO 60 ONLY 60	● ESCLUSO 65 EXCLUDING 65
** SOLO 60/90 ONLY 60/90	●● ESCLUSO 60 EXCLUDING 60
	●●● ESCLUSO 90 EXCLUDING 90

BASI H 75
BASE UNITS H 75

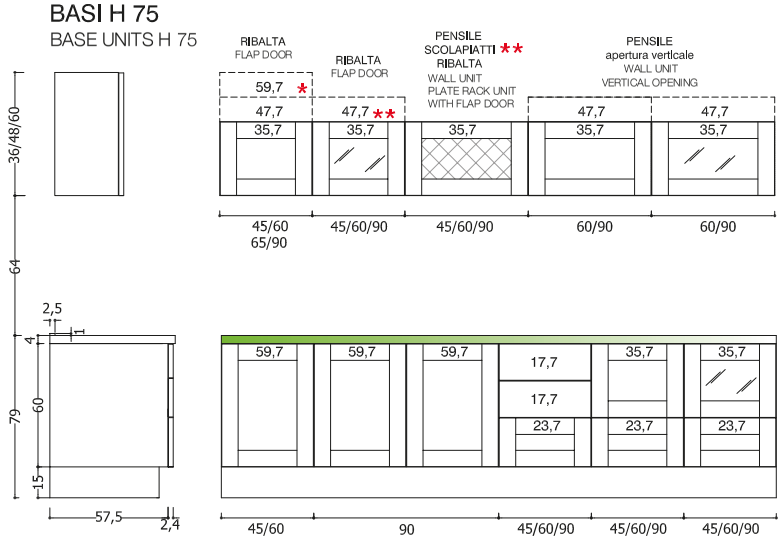

BASI SOSPESE
HANGING BASE UNITS

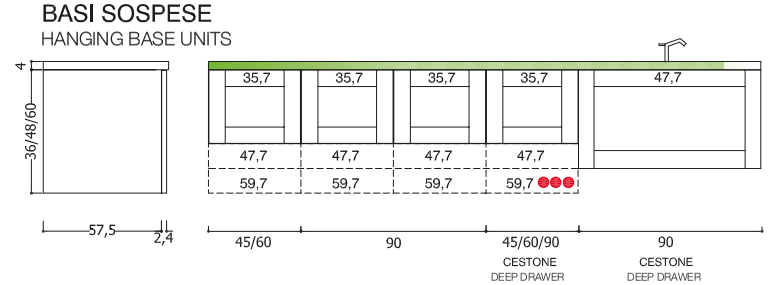

BASI LIVING
ROOM UNITS

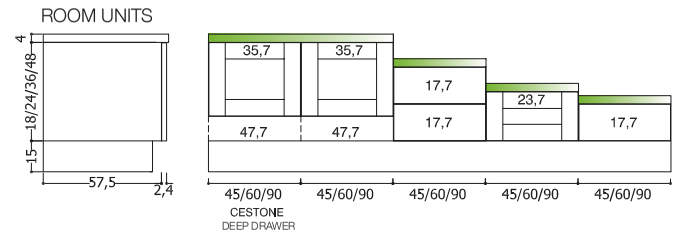

MODULARITÀ E COMPONIBILITÀ MODULARITY AND FITTING SOLUTIONS

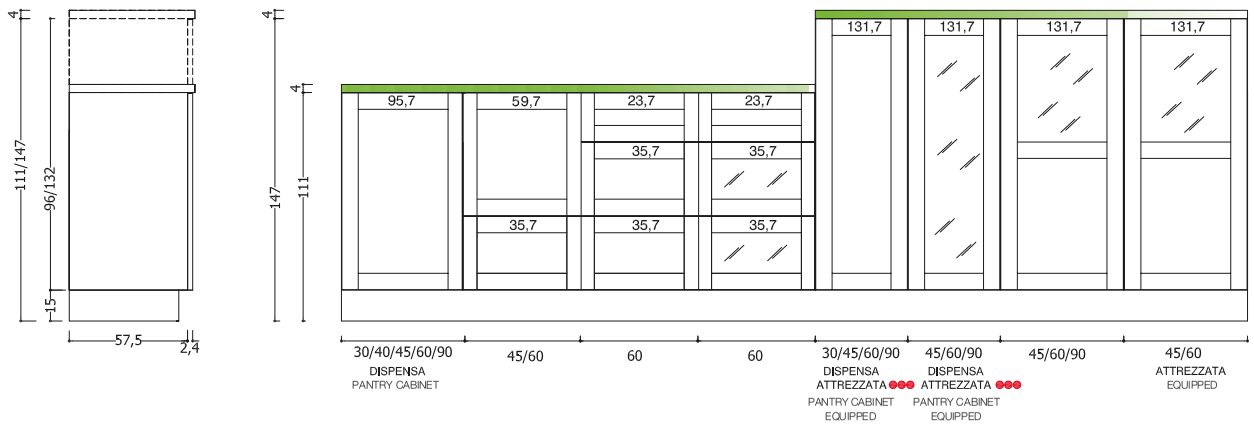

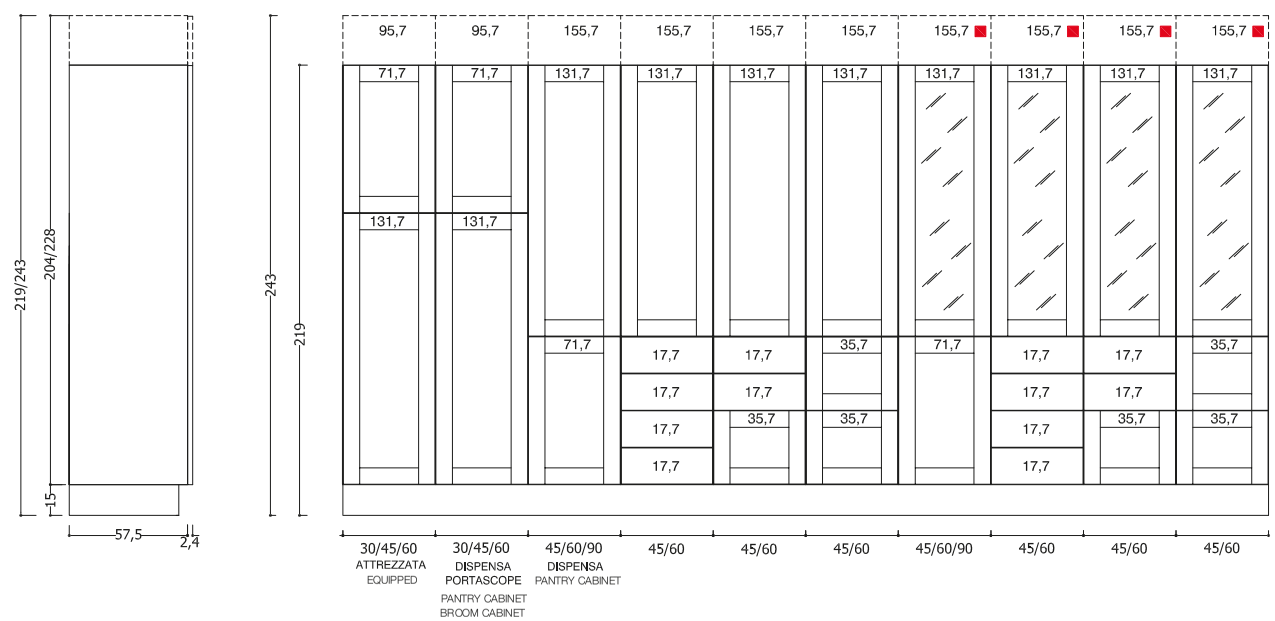

ANTA VETRO SOLO 45
GLASS DOOR ONLY 45

VERONICA
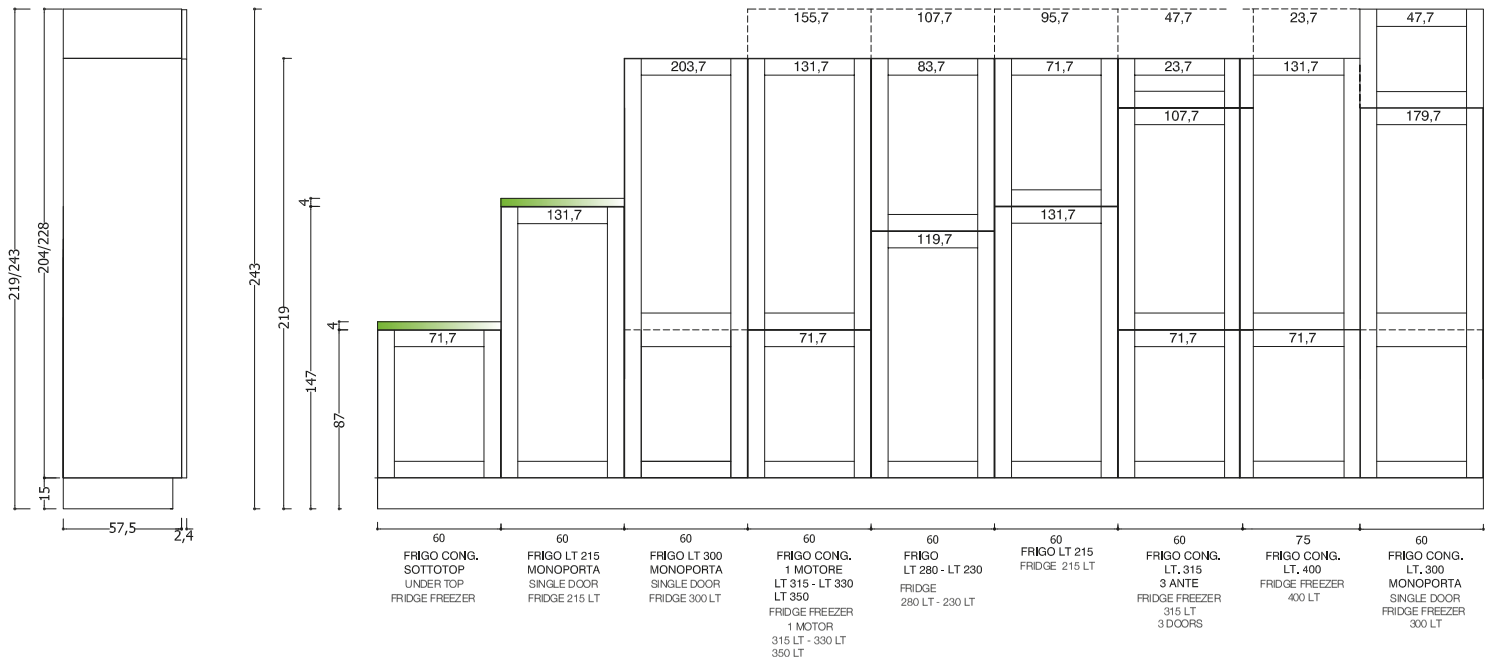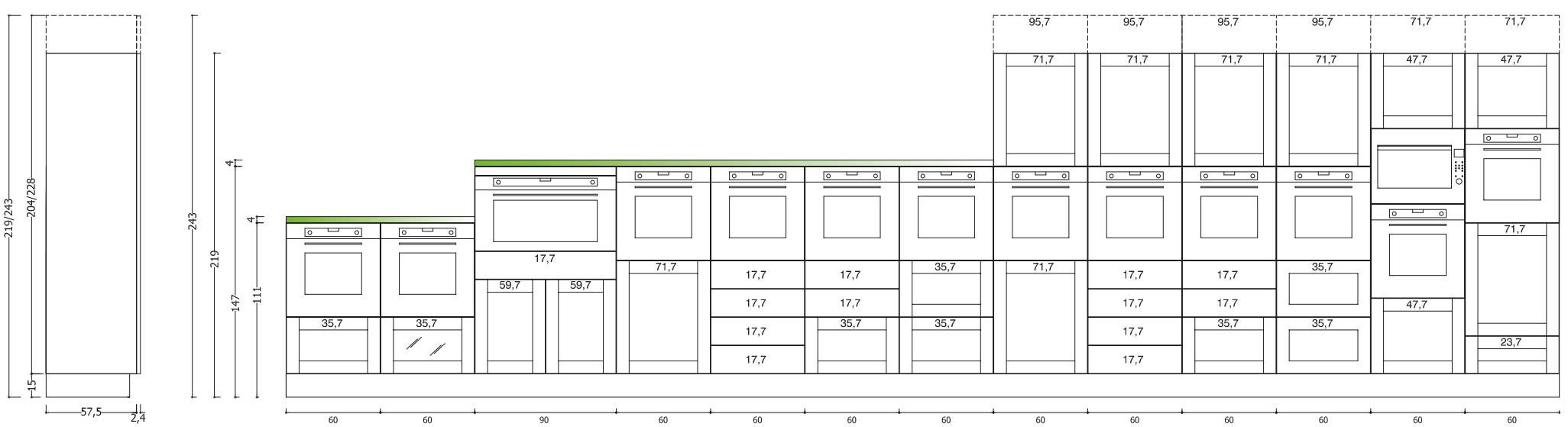
MODULARITÀ E COMPONIBILITÀ MODULARITY AND FITTING SOLUTIONS